Product data sheet

Specifications



pressure switch XMLC 2.5 bar - adjustable scale 2 thresholds - 2 C/O

XMLCS02B2S12

Main

Range of product	Telemecanique Pressure sensors XM
Product or component type	Electromechanical pressure sensor
Pressure sensor type	Electromechanical pressure sensor
Device short name	XMLC
Pressure rating	2.5 bar
Controlled fluid	Air (0…160 °C) Fresh water (0…160 °C) Hydraulic oil (0…160 °C)
Fluid connection type	G 1/4 (female) conforming to ISO 228
Electrical connection	Screw-clamps terminals, 1 x 0.5...2 x 2.5 mm²
AWG gauge	AWG 20...AWG 14
Cable entry	Cable gland 7…13 mm
Contacts type and composition	2 C/O
Product specific application	30 bar overpressure
Pressure switch type of operation	Regulation between 2 thresholds
Electrical circuit type	Control circuit
Scale type	Adjustable differential
Local display	With
Adjustable range of switching point on rising pressure	0.3…2.5 bar
Adjustable range of switching point on falling pressure	0.2…2.32 bar
Possible differential maximum at high setting	1.25 bar
Maximum permissible accidental pressure	37.5 bar
Destruction pressure	67.5 bar
Pressure actuator	Diaphragm
Materials in contact with fluid	Steel FPM, FKM
Enclosure material	Zinc alloy
[In] rated current	3 A, B300, AC-15 (Ue = 120 V) conforming to EN/IEC 60947-5-1 1.5 A, B300, AC-15 (Ue = 240 V) conforming to EN/IEC 60947-5-1

Disclaimer: This documentation is not intended as a substitute for and is not to be used for determining suitability or reliability of these products for specific user applications

	0.1 A, R300, DC-13 (Ue = 250 V) conforming to EN/IEC 60947-5-1

Complementary

Possible differential minimum at low setting	0.1 bar (+/- 0.02 bar)
Possible differential minimum at high setting	0.18 bar (+/- 0.03 bar)
Maximum permissible pressure - per cycle	30 bar
Terminal block type	8 terminals
Maximum operating rate	120 cyc/mn
Repeat accuracy	2 %
[Ui] rated insulation voltage	300 V conforming to UL 508 500 V conforming to EN/IEC 60947-1 300 V conforming to CSA C22.2 No 14
[Uimp] rated impulse withstand voltage	6 kV conforming to EN/IEC 60947-1
Auxiliary contacts operation	Simultaneous, snap action
Contacts material	Silver contacts
Maximum resistance across terminals	25 mOhm conforming to IEC 255-7 category 3 25 mOhm conforming to NF C 93-050 method A
Short-circuit protection	10 A cartridge fuse, type gG (gl)
Mechanical durability	2000000 cycles
Setting	External
Height	113 mm
Depth	85 mm
Width	46 mm
Net weight	3.5 kg

Environment

Standards	CSA C22.2 No 14 EN/IEC 60947-5-1 IEC 60947-5-1 CE UL 508
Product certifications	EAC CSA UL
Protective treatment	TC standard version
Ambient air temperature for operation	-25…70 °C
Ambient air temperature for storage	-40…70 °C
Operating position	Any position
Vibration resistance	4 gn conforming to IEC 60068-2-6 (f = 30…500 Hz)
Shock resistance	50 gn conforming to IEC 60068-2-27
Electrical shock protection class	Class I conforming to IEC 1140 Class I conforming to IEC 536 Class I conforming to NF C 20-030
IP degree of protection	IP66 conforming to EN/IEC 60529

Packing Units

Unit Type of Package 1	PCE

Number of Units in Package 1	1
Package 1 Weight	2.765 kg
Package 1 Height	10.6 cm
Package 1 width	5.7 cm
Package 1 Length	9.7 cm
Unit Type of Package 2	CAR
Number of Units in Package 2	1
Package 2 Weight	2.8 kg
Package 2 Height	10.6 cm
Package 2 width	5.7 cm
Package 2 Length	9.7 cm

Offer Sustainability

Sustainable offer status	Green Premium product
REACh Regulation	REACh Declaration
EU RoHS Directive	Pro-active compliance (Product out of EU RoHS legal scope) EU RoHS Declaration
Mercury free	Yes
RoHS exemption information	Yes
Environmental Disclosure	Product Environmental Profile
California proposition 65	WARNING: This product can expose you to chemicals including: Diisononyl phthalate (DINP), which is known to the State of California to cause cancer, and Di-isodecyl phthalate (DIDP), which is known to the State of California to cause birth defects or other reproductive harm. For more information go to www.P65Warnings.ca.gov

Contractual warranty

Warranty	18 months

Product data sheet XMLCS02B2S12

Dimensions Drawings

Dimensions

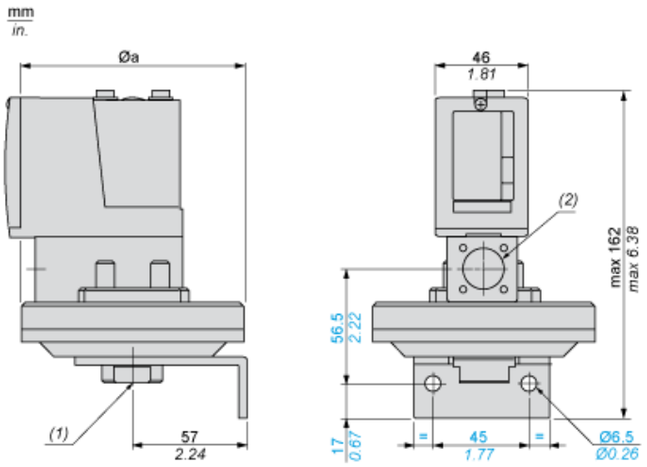

Ø a = 110 mm / 4.33 in.
(1) 1 fluid entry, tapped G1/4 (BSP female)
(2) 1 electrical connections entry, tapped M20 x 1.5

Wiring Diagram

Terminal Model

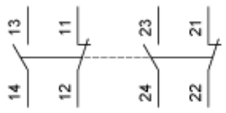

Operating Curves

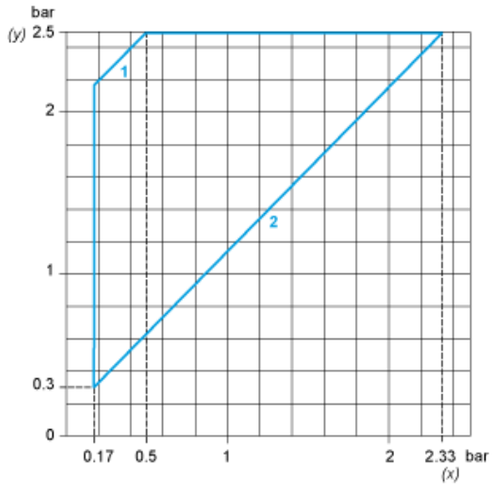

(y) Rising pressure
(x) Falling pressure
1 : Maximum differential
2 : Minimum differential

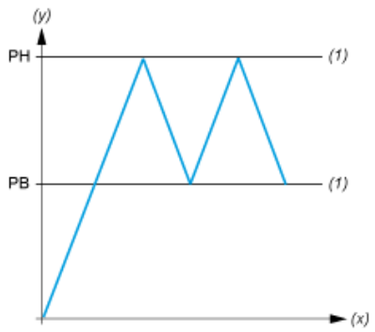

(y) Pressure
(x) Time
(1) Adjustable value
PH : High point
PB : Below point