

Model Number

NBN40-U1-A2

Features

- **40 mm not embeddable**
- **4-wire DC**
- **4 LEDs indicator for 360° visibility**

Connection

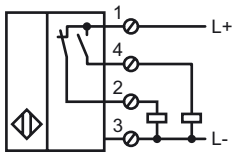

Accessories

V1-M20-80
Receptacles, M12/M20; plastic version

MHW 01
Modular mounting bracket

Dimensions

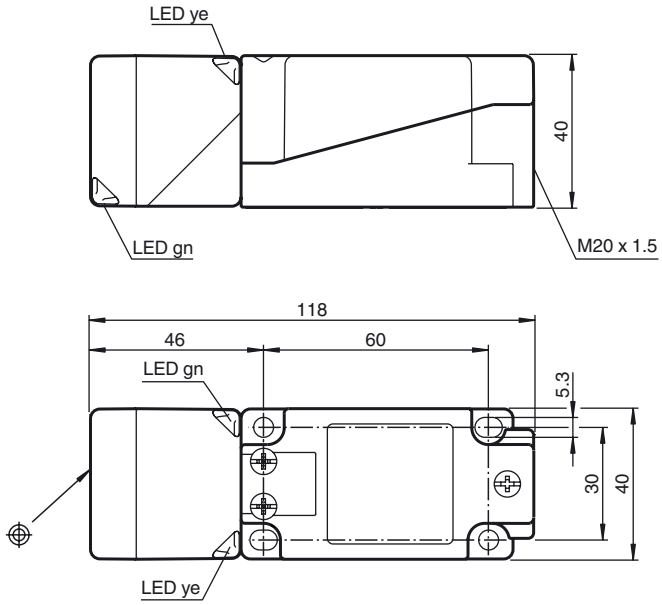

Technical Data

General specifications		
Switching element function		PNP NO/NC
Rated operating distance	s_n	40 mm
Installation		not embeddable
Output polarity		DC
Assured operating distance	s_a	0 ... 32.4 mm
Reduction factor r_{Al}		0.31
Reduction factor r_{Cu}		0.3
Reduction factor r_{303}		0.74
Reduction factor r_{Brass}		0.39
Nominal ratings		
Operating voltage	U_B	10 ... 30 V DC
Switching frequency	f	0 ... 150 Hz
Hysteresis	H	typ. 5 %
Reverse polarity protected		reverse polarity protected
Short-circuit protection		pulsing
Voltage drop	U_d	≤ 2 V
Operating current	I_L	0 ... 200 mA
Off-state current	I_r	0 ... 0.5 mA
No-load supply current	I_0	≤ 20 mA
Operating voltage display		LED, green
Indication of the switching state		LED, yellow
Functional safety related parameters		
$MTTF_d$		1230 a
Mission Time (T_M)		20 a
Diagnostic Coverage (DC)		0 %
Ambient conditions		
Ambient temperature		-25 ... 85 °C (-13 ... 185 °F)
Mechanical specifications		
Connection type		screw terminals
Core cross-section		≤ 2.5 mm^2
Housing material		PA/metal with epoxy powder coating
Sensing face		PA
Housing base		plastic
Protection degree		IP68 / IP69K
Mass		225 g
Note		Tightening torque: 1.8 Nm (housing) Tightening torque: 1.0 Nm (Screw terminal)
Compliance with standards and directives		
Standard conformity		
Standards		EN 60947-5-2:2007 IEC 60947-5-2:2007
Approvals and certificates		
UL approval		cULus Listed, General Purpose
CSA approval		cCSAus Listed, General Purpose
CCC approval		Products with a maximum operating voltage of ≤36 V do not bear a CCC marking because they do not require approval.

Release date: 2011-08-16 13:45 Date of issue: 2011-08-16 194788_eng.xml

Subject to modifications without notice
Copyright Pepperl+Fuchs