# Operating instructions

**ebm-papst Mulfingen GmbH & Co. KG**
Bachmühle 2
D-74673 Mulfingen
Phone +49 (0) 7938 81-0
Fax +49 (0) 7938 81-110
info1@de.ebmpapst.com
www.ebmpapst.com

## CONTENTS

**1. SAFETY REGULATIONS AND NOTES 1**
1.1 Levels of hazard warnings 1
1.2 Staff qualification 1
1.3 Basic safety rules 1
1.4 Electrical voltage 1
1.5 Safety and protective functions 2
1.6 Mechanical movement 2
1.7 Emission 2
1.8 Hot surface 2
1.9 Transport 2
1.10 Storage 2

**2. PROPER USE 3**

**3. TECHNICAL DATA 4**
3.1 Product drawing 4
3.2 Nominal data 5
3.3 Technical features 5
3.4 Mounting data 5
3.5 Transport and storage conditions 5

**4. CONNECTION AND START-UP 6**
4.1 Connecting the mechanical system 6
4.2 Connecting the electrical system 6
4.3 Connection screen 7
4.4 Checking the connections 8
4.5 Switch on device 8
4.6 Switching off the device 8

**5. MAINTENANCE, MALFUNCTIONS, POSSIBLE CAUSES AND REMEDIES 8**
5.1 Cleaning 9
5.2 Safety test 9
5.3 Disposal 9

Translation of the original operating instructions

## 1. SAFETY REGULATIONS AND NOTES

Please read these operating instructions carefully before starting to work with the device. Observe the following warnings to prevent malfunctions or physical damage to both property and people.
These operating instructions are to be regarded as part of this device. If the device is sold or transferred, the operating instructions must accompany it.
These operating instructions may be duplicated and forwarded for information about potential dangers and their prevention.

### 1.1 Levels of hazard warnings

These operating instructions use the following hazard levels to indicate potentially hazardous situations and important safety regulations:



**DANGER**
Indicates an imminently hazardous situation which, if not avoided, will result in death or serious injury. Compliance with the measures is mandatory.

**WARNING**
Indicates a potentially hazardous situation which, if not avoided, could result in death or serious injury. Exercise extreme caution while working.

**CAUTION**
Indicates a potentially hazardous situation which, if not avoided, may result in minor or moderate injury or damage of property.

**NOTE**
A potentially harmful situation can occur and, if not avoided, can lead to property damage.

### 1.2 Staff qualification

The device may only be transported, unpacked, installed, operated, maintained and otherwise used by qualified, trained and authorised technical staff.
Only authorised specialists are permitted to install the device, to carry out a test run and to perform work on the electrical installation.

### 1.3 Basic safety rules

Any safety hazards stemming from the device must be re-evaluated once it is installed in the end device.
The local industrial safety regulations must always be observed when working on the device.
Keep the workplace clean and tidy. Untidiness in the working area increases the risk of injury.
Observe the following when working on the unit:

⇒ Do not make any modifications, additions or conversions to the device without the approval of ebm-papst.

### 1.4 Electrical voltage

⇒ Check the electrical equipment of the device at regular intervals, refer to chapter 5.2 Safety test.

⇒ Replace loose connections and defective cables immediately.



**DANGER**
**Electrical load on the device**
Risk of electric shock

→ Stand on a rubber mat if you are working on an electrically charged device.

**CAUTION**
**Electrical load on the capacitor after device is switched off**
Electric shock, risk of injury

→ Discharge the capacitors before working on the device.



**WARNING**
**Terminals and connections have voltage even with a unit that is shut off**
Electric shock

→ Wait five minutes after disconnecting the voltage at all poles before opening the device.

**CAUTION**
**In the event of failure, there is electric voltage at the rotor and impeller**
The rotor and impeller are base insulated.

→ Do not touch the rotor and impeller once they are installed.

**CAUTION**
**The motor restarts automatically when operating voltage is applied, e.g. after a power failure.**
Danger of injury

→ Keep out of the danger zone of the device.

→ When working on the device, switch off the mains supply voltage and secure the latter from being switched on again.

→ Wait until the device stops.

## 1.5 Safety and protective functions



**DANGER**
**Protective device missing and protective device not functioning**
Without a protective device there is a risk of serious injury, for instance when reaching into the device during operation.

→ Operate the device only with a fixed protective device and guard grille.

→ The fixed protective device must be able to withstand the kinetic energy of a fan blade that becomes detached at maximum speed. There must not be any gaps which it is possible to reach into with the fingers, for example.

→ The device is a built-in component. As the operator, you are responsible for ensuring that the device is secured adequately.

→ Stop the device immediately if a protective device is found to be missing or ineffective.

## 1.6 Mechanical movement



**DANGER**
**Rotating device**
Body parts that come into contact with the rotor and impeller can be injured.

→ Secure the device against accidental contact.

→ Before working on the system/machine, wait until all parts have come to a standstill.

**WARNING**
**Rotating device**
Long hair, dangling items of clothing, jewellery and similar items can become entangled and be pulled into the device. Risk of injury.

→ Do not wear any loose-fitting or dangling clothing or jewellery while working on rotating parts.

→ Protect long hair with a cap.

## 1.7 Emission

**WARNING**
**Depending on the installation and operating conditions, a sound pressure level greater than 70 dB(A) may arise.**
Danger of noise-induced hearing loss

→ Take appropriate technical safety measures.

→ Protect operating personnel with appropriate safety equipment, e.g. hearing protection.

→ Also observe the requirements of local agencies.

## 1.8 Hot surface



**CAUTION**
**High temperature at the motor housing**
Danger of burn injuries

→ Ensure that sufficient protection against accidental contact is provided.

## 1.9 Transport

**NOTE**
**Transport of device**

→ Transport the device in its original packaging only.

→ Secure the device so that it does not slip, e.g. by using a clamping strap.

## 1.10 Storage

⇒ Store the device, partially or fully assembled, in the original packaging in a clean, dry and weatherproof place free of vibrations.

⇒ Protect the device against environmental effects and dirt until final installation.

⇒ We recommend storing the device for no longer than one year in order to guarantee trouble-free operation and longest possible service life.

⇒ Even devices explicitly intended for outdoor use are to be stored as described prior to commissioning.

⇒ Maintain the storage temperature, see chapter 3.5 Transport and storage conditions.

Translation of the original operating instructions



ebm-papst Mulfingen GmbH & Co. KG · Bachmühle 2 · D-74673 Mulfingen · Phone +49 (0) 7938 81-0 · Fax +49 (0) 7938 81-110 · info1@de.ebmpapst.com · www.ebmpapst.com

## 2. PROPER USE

The device is exclusively designed as a built-in device for conveying air according to its technical data.
Any other usage above and beyond this does not conform with the intended purpose and constitutes misuse of the device.
Customer equipment must be capable of withstanding the mechanical and thermal stresses that can arise from this product. This applies for the entire service life of the equipment in which this product is installed.

**Proper use also includes:**

- Conveying of air at an ambient air pressure of 800 mbar to 1050 mbar.
- Using the device in accordance with the permitted ambient temperature, see chapter 3.5 Transport and storage conditions and chapter 3.2 Nominal data.
- Operating the device with all protective features in place.
- Minding the operating instructions.

**Improper use**

Using the device in the following ways is particularly prohibited and may cause hazards:

- Operating the device with an imbalance, e.g. caused by dirt deposits or icing.
- Resonance mode, operation with heavy vibrations. These also include vibrations that are transmitted from the customer system to the fan.
- Operation in medical equipment with a life-sustaining or lifesaving function.
- Moving solids content in flow medium.
- Painting the device
- Connections (e.g. screws) coming loose during operation.
- Moving air that contains abrasive particles.
- Moving highly corrosive air, e.g. salt spray mist. Exceptions are devices that are intended for salt spray mist and protected accordingly.
- Moving air that contains dust pollution, e.g. suctioning off saw dust.
- Operating the device close to flammable materials or components.
- Operating the device in an explosive atmosphere.
- Using the device as a safety component or for taking on safety-related functions.
- Operation with completely or partially disassembled or modified protective features.
- In addition, all application options that are not listed under proper use.

Translation of the original operating instructions



ebm-papst Mulfingen GmbH & Co. KG · Bachmühle 2 · D-74673 Mulfingen · Phone +49 (0) 7938 81-0 · Fax +49 (0) 7938 81-110 · info1@de.ebmpapst.com · www.ebmpapst.com

## 3. TECHNICAL DATA

### 3.1 Product drawing

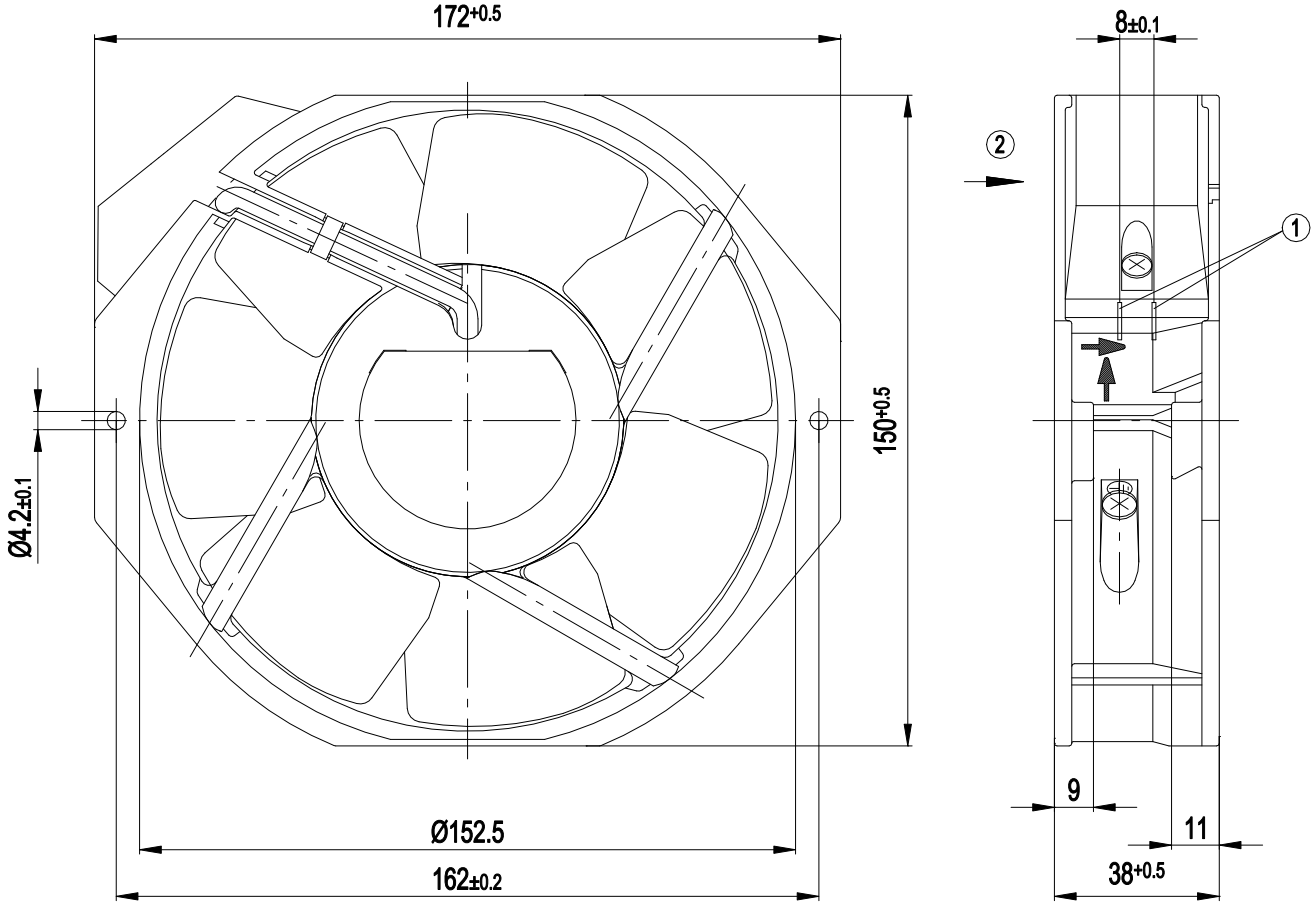


All measures have the unit mm.

| | |
|---|---|
| 1 | 2x flat plug 2.8 x 0.5 mm |
| 2 | Direction of air flow "V" |

Translation of the original operating instructions



ebm-papst Mulfingen GmbH & Co. KG · Bachmühle 2 · D-74673 Mulfingen · Phone +49 (0) 7938 81-0 · Fax +49 (0) 7938 81-110 · info1@de.ebmpapst.com · www.ebmpapst.com

## 3.2 Nominal data

| | |
|---|---|
| **Motor** | M2E052-BA |

| | | |
|---|---|---|
| **Phase** | 1~ | 1~ |
| **Nominal voltage / VAC** | 115 | 115 |
| **Frequency / Hz** | 50 | 60 |

| | | |
|---|---|---|
| **Type of data definition** | fa | fa |
| **Valid for approval / standard** | CE | CE |
| **Speed (rpm) / min$^{-1}$** | 2800 | 3350 |
| **Power input / W** | 27 | 28 |
| **Current draw / A** | 0.24 | 0.25 |
| **Motor capacitor / µF** | 3 | 3 |
| **Capacitor voltage / VDB** | 220 | 220 |
| **Capacitor standard** | S0 (CE) | S0 (CE) |
| **Min. ambient temperature / °C** | -25 | -25 |
| **Max. ambient temperature / °C** | 55 | 65 |

ml = Max. load · me = Max. efficiency · fa = Running at free air
cs = Customer specs · cu = Customer unit

Subject to alterations

## 3.3 Technical features

| | |
|---|---|
| **Mass** | 0.8 kg |
| **Size** | 142 mm |
| **Motor size** | 52 |
| **Surface of rotor** | Coated in black |
| **Material of impeller** | Sheet steel, coated in black |
| **Housing material** | Die-cast aluminium, coated in black |
| **Number of blades** | 7 |
| **Direction of air flow** | V |
| **Direction of rotation** | Counter-clockwise, seen on rotor |
| **Type of protection** | IP22; Depending on installation and position |
| **Insulation class** | "B" |
| **Humidity (F) / environmental protection class (H)** | H0+ |
| **Mounting position** | Any |
| **Condensation drainage holes** | None |
| **Operation mode** | S1 |
| **Motor bearing** | Ball bearing |
| **Touch current acc. IEC 60990 (measuring network Fig. 4, TN system)** | < 0.75 mA |
| **Electrical connection** | Plug |
| **Motor protection** | Thermal overload protector (TOP) wired internally |
| **Protection class** | I (if earth wire is connected by customer) |
| **Motor capacitor according to EN 60252-1 in safety protection class** | S0 |
| **Product conforming to standard** | EN 60335-1; CE |
| **Approval** | VDE; UL 507; EAC; CCC; CSA C22.2 no. 113 |

For cyclic speed loads, note that the rotating parts of the device are designed for maximum one million load cycles. If you have specific questions, contact ebm-papst for support.

⇒ Use the device in accordance with its protection type.

### Notes on surface quality

The surfaces of the products conform to the generally applicable industrial standard. The surface quality may vary during the production period. Strength, dimensional stability and dimensional accuracy are not affected by this.
The colour pigments of the paints used react perceptibly to UV light over the course of time. This does not however have any influence on the technical properties of the products. To prevent the formation of patches and fading, the product is to be protected against UV radiation. Changes in colour are not a reason for complaint and are not covered by the warranty.

## 3.4 Mounting data

⇒ Secure the mounting screws against accidentally coming loose (e.g. by using self-locking screws).

For depth of screw, see chapter 3.1 Product drawing

| | |
|---|---|
| **Strength class for mounting screws** | 8.8 |

Any further mounting data required can be taken from the product drawing or Section chapter 4.1 Connecting the mechanical system.

## 3.5 Transport and storage conditions

| | |
|---|---|
| **Max. permissible ambient motor temp. (transp./ storage)** | + 80 °C |
| **Min. permissible ambient motor temp. (transp./storage)** | - 40 °C |

Translation of the original operating instructions



ebm-papst Mulfingen GmbH & Co. KG · Bachmühle 2 · D-74673 Mulfingen · Phone +49 (0) 7938 81-0 · Fax +49 (0) 7938 81-110 · info1@de.ebmpapst.com · www.ebmpapst.com

## 4. CONNECTION AND START-UP

### 4.1 Connecting the mechanical system

**CAUTION**
**Cutting and crushing hazard when removing the device from the packaging**
Blades can be bent

→ Carefully remove the device from its packaging, only touching the wall ring. Make sure to avoid any shock.

→ Wear safety shoes and cut-resistant safety gloves.

**NOTE**
**Damage to device from vibration**
Bearing damage, reduced service life

→ Forces or impermissibly high vibration levels must not be transmitted to the fan from system components.

→ If the fan is connected to air ducts, it should isolated from vibrations, for example using compensators or similar elements.

→ Fasten the fan to the substructure without distorting it.

⇒ Check the device for transport damage. Damaged devices must no longer be installed.

⇒ Install the undamaged device according to your application.

**NOTE**
**Motor capacitor**

→ The product is equipped with a motor capacitor with safety protection class P0/S0 according to EN 60252-1. Take this into consideration when fitting it to the end product on the basis of applicable regulations.

**CAUTION**
**Possibility of damage to the device**
Serious damage may result if the device slips during assembly.

→ Keep the device fixed in position at the installation location until all attachment screws have been tightened.

- The fan must not be strained on fastening.

### 4.2 Connecting the electrical system

**DANGER**
**Electric voltage on the device**
Electric shock

→ Always install a protective earth first.

→ Check the protective earth.

**DANGER**
**Incorrect insulation**
Risk of fatal injury from electric shock

→ Use only cables that meet the specified installation requirements for voltage, current, insulation material, load etc.

→ Route cables such that they cannot be touched by any rotating parts.

**CAUTION**
**Electrical voltage**
The fan is a built-in component and features no electrically isolating switch.

→ Only connect the fan to circuits that can be switched off with an all-pole separating switch.

→ When working on the fan, you must switch off the installation/machine in which the fan is installed and secure it from being switched on again.

**NOTE**
**Water penetration into leads or wires**
Water enters at the cable end on the customers side and can damage the device.

→ Make sure that the cable end is connected in a dry environment.

Connect the device only to circuits that can be switched off using an all-pole disconnecting switch.

#### 4.2.1 Prerequisites

⇒ Check that the data on the type plate match the connection data.

⇒ If the operating capacitor is not installed by ebm-papst, check whether the data of the operating capacitor match the data on the type plate.

⇒ Before connecting the device, ensure that the supply voltage matches the operating voltage of the device.

⇒ Only use cables designed for current according to the type plate. For determining the cross-section, follow the basic principles in accordance with EN 61800-5-1. The protective earth must have a cross-section equal to or greater than the outer conductor cross-section.
We recommend the use of 105°C cables. Ensure that the minimum cable cross-section is at least AWG26/0.13 mm².

**Protective earth contact resistance as per EN 60335**

Compliance with the resistance specifications as per EN 60335 for the protective earth connection circuit must be verified in the application. Depending on the installation situation, it may be necessary to connect an additional protective earth conductor by way of the extra protective earth terminal provided on the device.

#### 4.2.2 Voltage control

**NOTE**
Excessive current may occur with speed control using transformers or electronic voltage regulators (e.g. phase angle control). In addition, depending on how the unit is installed, noise and vibration can occur with phase angle control. Vibrations can lead to bearing damage, which can lead to premature failure.

#### 4.2.3 Frequency inverter

Please use a frequency converter only after consultation with ebm-papst.

For operation with frequency converters, fit sinusoidal filters that work on all poles (phase-phase and phase-earth) between the frequency converter and the motor.
During operation with frequency converters, an all-pole sine filter protects the motor against high-voltage transients that can destroy the winding insulation system, and against harmful bearing currents.

Heating-up of the motor when using a frequency converter must be checked by the customer following installation in the end device.

Translation of the original operating instructions



ebm-papst Mulfingen GmbH & Co. KG · Bachmühle 2 · D-74673 Mulfingen · Phone +49 (0) 7938 81-0 · Fax +49 (0) 7938 81-110 · info1@de.ebmpapst.com · www.ebmpapst.com

### 4.3 Connection screen

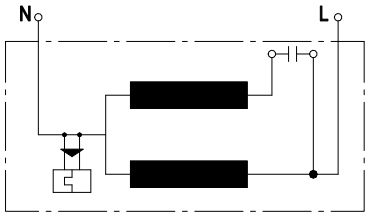


Translation of the original operating instructions



ebm-papst Mulfingen GmbH & Co. KG · Bachmühle 2 · D-74673 Mulfingen · Phone +49 (0) 7938 81-0 · Fax +49 (0) 7938 81-110 · info1@de.ebmpapst.com · www.ebmpapst.com

### 4.4 Checking the connections

⇒ Make sure that the power is off (all phases).

⇒ Secure it from being switched on again.

⇒ Check that the mating connector is correctly locked into the panel connector.

⇒ Check that the mating connector is correctly crimped to the connection line.

### 4.5 Switch on device

The device is not to be switched on until it has been installed properly and in accordance with its intended use, including the required protective devices and professional electrical connection. This also applies to devices which have already been equipped with plugs and terminals or similar connectors by the customer.



**WARNING**
**Hot motor housing**
Fire hazard

→ Ensure that no combustible or flammable materials are located close to the fan.

⇒ Inspect the device for visible external damage and the proper function of the protective features before switching it on.

⇒ Check the air flow paths of the fan for foreign objects and remove any that are found.

⇒ Apply the nominal voltage to the voltage supply.



**NOTE**
**Damage to device by vibrations**
Bearing damage, reduced service life

→ The fan must operate free of vibrations throughout its speed control range.

→ Strong vibrations can result from improper handling, imbalance resulting from damage during transport, or component-induced or structural resonances.

→ When putting the fan into service, determine the speed ranges with excessive vibration levels and also any resonance frequencies that may be present.

→ When regulating the speed, pass through resonance ranges as quickly as possible or find another remedy.

→ Operation at excessive vibration levels can lead to premature failure.

### 4.6 Switching off the device

⇒ Disconnect the device from the supply voltage at the main switch for the supply line.

## 5. MAINTENANCE, MALFUNCTIONS, POSSIBLE CAUSES AND REMEDIES

Do not perform any repairs on your device. Return the device to ebm-papst for repair or replacement.



**WARNING**
**Terminals and connections have voltage even with a unit that is shut off**
Electric shock

→ Wait five minutes after disconnecting the voltage at all poles before opening the device.

**CAUTION**
**Electrical load on the capacitor after device is switched off**
Electric shock, risk of injury

→ Discharge the capacitors before working on the device.

**CAUTION**
**The motor restarts automatically when operating voltage is applied, e.g. after a power failure.**
Danger of injury

→ Keep out of the danger zone of the device.

→ When working on the device, switch off the mains supply voltage and secure the latter from being switched on again.

→ Wait until the device stops.



**NOTE**
If the device is not operated for a lengthy period in installed condition in a dry environment, it is to be started up and operated at full speed for one hour at least every four months. If the device is not operated for a lengthy period in installed condition in a damp environment (e.g. outdoors), it is to be started up and operated at full speed for at least two hours once a month to move the bearings and allow any condensate that may have ingressed to evaporate.

| Malfunction/error | Possible cause | Possible remedy |
|---|---|---|
| **Impeller running roughly** | Imbalance in rotating parts | Clean the device; if imbalance is still evident after cleaning, replace the device. If you have attached any weight clips during cleaning, make sure to remove them afterwards. |
| **Motor does not turn** | Mechanical blockage | Switch off, de-energise, and remove mechanical blockage. |
| | Mains supply voltage faulty | Check mains supply voltage, restore power supply. |
| | Faulty connection | De-energise, correct connection, see connection diagram. |

Translation of the original operating instructions



ebm-papst Mulfingen GmbH & Co. KG · Bachmühle 2 · D-74673 Mulfingen · Phone +49 (0) 7938 81-0 · Fax +49 (0) 7938 81-110 · info1@de.ebmpapst.com · www.ebmpapst.com

| | | |
|---|---|---|
| | Thermal overload protector responded | Allow motor to cool off, locate and rectify cause of error, if necessary cancel restart lock-out |
| | Unacceptable operating point | Check operating point |
| **Overtemperature of motor** | Ambient temperature too high | Lower ambient temperature if possible |
| | Insufficient cooling | Improve cooling |

If you have any other problems, contact ebm-papst.

## 5.1 Cleaning

**NOTE**
**Damage to the device during cleaning**
Malfunction possible

→ Do not clean the device using a water jet or high-pressure cleaner.

→ Do not use any acid, alkali or solvent-basedcleaning agents.

→ Do not use any pointed or sharp-edged objects for cleaning

## 5.2 Safety test

| What has to be tested? | How to test? | Frequency | Which measure? |
|---|---|---|---|
| Check the protective casing against accidental contact for damage and to ensure that it is intact | Visual inspection | At least every 6 months | Repair or replacement of the device |
| Check the device for damage to blades and housing | Visual inspection | At least every 6 months | Replacement of the device |
| Mounting the connection lines | Visual inspection | At least every 6 months | Fasten |
| Check the insulation of the wires for damage | Visual inspection | At least every 6 months | Replace wires |
| Weld seams for crack formation | Visual inspection | At least every 6 months | Replace device |
| Abnormal bearing noise | acoustic | At least every 6 months | Replace device |

## 5.3 Disposal

For ebm-papst, environmental protection and resource preservation are top priority corporate goals.
ebm-papst operates an environmental management system which is certified in accordance with ISO 14001 and rigorously implemented around the world on the basis of German standards.
Right from the development stage, ecological design, technical safety and health protection are fixed criteria.
The following section contains recommendations for ecological disposal of the product and its components.

### 5.3.1 Country-specific legal requirements

**NOTE**
**Country-specific legal requirements**
Always observe the applicable country-specific legal regulations with regard to the disposal of products or waste occurring in the various phases of the life cycle. The corresponding disposal standards are also to be heeded.

### 5.3.2 Disassembly

Disassembly of the product must be performed or supervised by qualified personnel with the appropriate technical knowledge.
The product is to be disassembled into suitable components for disposal employing standard procedures for motors.

**WARNING**
**Heavy parts of the product may drop off. Some of the product components are heavy. These components could drop off during disassembly.**
This can result in fatal or serious injury and material damage.

→ Secure components before unfastening to stop them falling.

### 5.3.3 Component disposal

The products are mostly made of steel, copper, aluminium and plastic. Metallic materials are generally considered to be fully recyclable.
Separate the components for recycling into the following categories:

- Steel and iron
- Aluminium
- Non-ferrous metal, e.g. motor windings
- Plastics, particularly with brominated flame retardants, in accordance with marking
- Insulating materials
- Cables and wires
- Electronic scrap, e.g. circuit boards

Only ferrite magnets and not rare earth magnets are used in external rotor motors from ebm-papst Mulfingen GmbH & Co. KG.

⇒ Ferrite magnets can be disposed of in the same way as normal iron and steel.

Electrical insulating materials on the product, in cables and wires are made of similar materials and are therefore to be treated in the same manner.
The materials concerned are as follows:

- Miscellaneous insulators used in the terminal box
- Power lines
- Cables for internal wiring
- Electrolytic capacitors

Translation of the original operating instructions



ebm-papst Mulfingen GmbH & Co. KG · Bachmühle 2 · D-74673 Mulfingen · Phone +49 (0) 7938 81-0 · Fax +49 (0) 7938 81-110 · info1@de.ebmpapst.com · www.ebmpapst.com

Dispose of electronic components employing the proper procedures for electronic scrap.

→ Please contact ebm-papst for any other questions on disposal.

Translation of the original operating instructions



ebm-papst Mulfingen GmbH & Co. KG · Bachmühle 2 · D-74673 Mulfingen · Phone +49 (0) 7938 81-0 · Fax +49 (0) 7938 81-110 · info1@de.ebmpapst.com · www.ebmpapst.com