X20DO2322

Data sheet
3.20 (September 2024)



Translation of the original documentation

Publishing information

B&R Industrial Automation GmbH

B&R Strasse 1

5142 Eggelsberg

Austria

Telephone: +43 7748 6586-0

Fax: +43 7748 6586-26

office@br-automation.com

Disclaimer

All information in this document is current as of its creation. The contents of this document are subject to change without notice. B&R Industrial Automation GmbH assumes unlimited liability in particular for technical or editorial errors in this document only (i) in the event of gross negligence or (ii) for culpably inflicted personal injury. Beyond that, liability is excluded to the extent permitted by law. Liability in cases in which the law stipulates mandatory unlimited liability (such as product liability) remains unaffected. Liability for indirect damage, consequential damage, business interruption, loss of profit or loss of information and data is excluded, in particular for damage that is directly or indirectly attributable to the delivery, performance and use of this material.

B&R Industrial Automation GmbH notes that the software and hardware designations and brand names of the respective companies used in this document are subject to general trademark, brand or patent protection.

Hardware and software from third-party suppliers referenced in this document is subject exclusively to the respective terms of use of these third-party providers. B&R Industrial Automation GmbH assumes no liability in this regard. Any recommendations made by B&R Industrial Automation GmbH are not contractual content, but merely non-binding information for which no liability is assumed. When using hardware and software from third-party suppliers, the relevant user documentation of these third-party suppliers must additionally be consulted and, in particular, the safety guidelines and technical specifications contained therein must be observed. The compatibility of the products from B&R Industrial Automation GmbH described in this document with hardware and software from third-party suppliers is not contractual content unless this has been separately agreed in individual cases; in this respect, warranty for such compatibility is excluded in any case, and it is the sole responsibility of the customer to verify this compatibility in advance.

Version history

B&R makes every effort to keep documents as current as possible. The most current versions are available for download on the B&R website (www.br-automation.com).

1 General information

1.1 Other applicable documents

For additional and supplementary information, see the following documents.

Other applicable documents

Document name	Title
MAX20	X20 System user's manual
MAEMV	Installations / EMV guide

1.2 Order data

Order number	Short description	Figure
	Digital outputs	
X20DO2322	X20 digital output module, 2 outputs, 24 VDC, 0.5 A, source, 3-wire connections	
	Required accessories	
	Bus modules	
X20BM11	X20 bus module, 24 VDC keyed, internal I/O power supply connected through	
X20BM15	X20 bus module, with node number switch, 24 VDC keyed, internal I/O power supply connected through	
	Terminal blocks	
X20TB06	X20 terminal block, 6-pin, 24 VDC keyed	
X20TB12	X20 terminal block, 12-pin, 24 VDC keyed	

Table 1: X20DO2322 - Order data

1.3 Module description

This module is equipped with 2 outputs with 3-wire connections as well as 24 VDC and GND for the actuator power supply. The outputs are designed for a source circuit.
This module is designed for the 6-pin X20 terminal block. For logistical reasons, for example, the 12-pin terminal block can also be used.

Functions:

- Digital outputs
- OSP mode

Monitoring status of the digital outputs

The output signal of the digital outputs is monitored for short circuit or overload, as is the state of the power supply.

OSP mode

In mode "OSP" (Operator Set Predefined), the user defines a digital pattern. This OSP value is output as soon as the communication between the module and master is aborted.

2 Technical description

2.1 Technical data

Order number	X20DO2322
Short description	
I/O module	2 digital outputs 24 VDC for 3-wire connections
General information	
B&R ID code	0x1B96
Status indicators	I/O function per channel, operating state, module status
Diagnostics	
Module run/error	Yes, using LED status indicator and software
Outputs	Yes, using LED status indicator and software (output error status)
Power consumption	
Bus	0.13 W
Internal I/O	0.33 W
Additional power dissipation caused by actuators (resistive) [W] [1)]	+0.1
Certifications	
CE	Yes
UKCA	Yes
ATEX	Zone 2, II 3G Ex nA nC IIA T5 Gc IP20, Ta (see X20 user's manual) FTZÚ 09 ATEX 0083X
UL	cULus E115267 Industrial control equipment
HazLoc	cCSAus 244665 Process control equipment for hazardous locations Class I, Division 2, Groups ABCD, T5
DNV	Temperature: **B** (0 to 55°C) Humidity: **B** (up to 100%) Vibration: **B** (4 g) EMC: **B** (bridge and open deck)
CCS	Yes
LR	ENV1
KR	Yes
ABS	Yes
BV	**EC33B** Temperature: 5 - 55°C Vibration: 4 g EMC: Bridge and open deck
KC	Yes
Digital outputs	
Variant	Current-sourcing FET
Nominal voltage	24 VDC
Switching voltage	24 VDC -15% / +20%
Nominal output current	0.5 A
Total nominal current	1 A
Connection type	3-wire connections
Output circuit	Source
Output protection	Thermal shutdown in the event of overcurrent or short circuit (see value "Short-circuit peak current") Internal freewheeling diode for switching inductive loads (see section "Switching inductive loads")
Actuator power supply	0.5 A in total for output-independent actuator power supply
Diagnostic status	Output monitoring with 10 ms delay
Leakage current when the output is switched off	5 µA
$R_{DS(on)}$	210 mΩ
Peak short-circuit current	<12 A
Switch-on in the event of overload shutdown or short-circuit shutdown	Approx. 10 ms (depends on the module temperature)
Switching delay [2)]	
0 → 1	<300 µs
1 → 0	<300 µs
Switching frequency	
Resistive load [2)]	Max. 500 Hz
Inductive load	See section "Switching inductive loads".
Braking voltage when switching off inductive loads	Typ. 50 VDC

Table 2: X20DO2322 - Technical data

Order number	X20DO2322
Insulation voltage between channel and bus	500 V_{eff}
Actuator power supply	
Voltage	Module power supply minus voltage drop for short-circuit protection
Voltage drop for short-circuit protection at 500 mA	Max. 2 V
Short-circuit proof	Yes
Power consumption	
Actuator power supply	Max. 12 W [3]
Electrical properties	
Electrical isolation	Channel isolated from bus Channel not isolated from channel and I/O power supply
Operating conditions	
Mounting orientation	
Horizontal	Yes
Vertical	Yes
Installation elevation above sea level	
0 to 2000 m	No limitation
>2000 m	Reduction of ambient temperature by 0.5°C per 100 m
Degree of protection per EN 60529	IP20
Ambient conditions	
Temperature	
Operation	
Horizontal mounting orientation	-25 to 60°C
Vertical mounting orientation	-25 to 50°C
Derating	-
Storage	-40 to 85°C
Transport	-40 to 85°C
Relative humidity	
Operation	5 to 95%, non-condensing
Storage	5 to 95%, non-condensing
Transport	5 to 95%, non-condensing
Mechanical properties	
Note	Order 1x terminal block X20TB06 or X20TB12 separately. Order 1x bus module X20BM11 separately.
Pitch	$12.5^{+0.2}$ mm

Table 2: X20DO2322 - Technical data

1) Number of outputs x $R_{DS(on)}$ x Nominal output current[2]. For a calculation example, see section "Mechanical and electrical configuration" in the X20 system user's manual.
2) At loads ≤ 1 kΩ
3) The power consumption of the sensors connected to the module is not permitted to exceed 12 W.

2.2 Status LEDs

For a description of the various operating modes, see section "Additional information - Diagnostic LEDs" in the X20 System user's manual.

Figure	LED	Color	Status	Description
	r	Green	Off	Module supply not connected
			Single flash	RESET mode
			Blinking	PREOPERATIONAL mode
			On	RUN mode
			Flickering (approx. 10 Hz)	The module is in the OSP state.
	e	Red	Off	Module supply not connected or everything OK
			Single flash	Warning/Error on an I/O channel. Level monitoring for digital outputs has been triggered.
	e + r	Red on / Green single flash		Invalid firmware
	1 - 2	Orange		Output status of the corresponding digital output

2.3 Pinout

Auxiliary contacts are provided on the module for easy wiring. VDC and GND contacts are internally connected and can be loaded with a total of 0.5 A (see section "Connection example" on page 6).

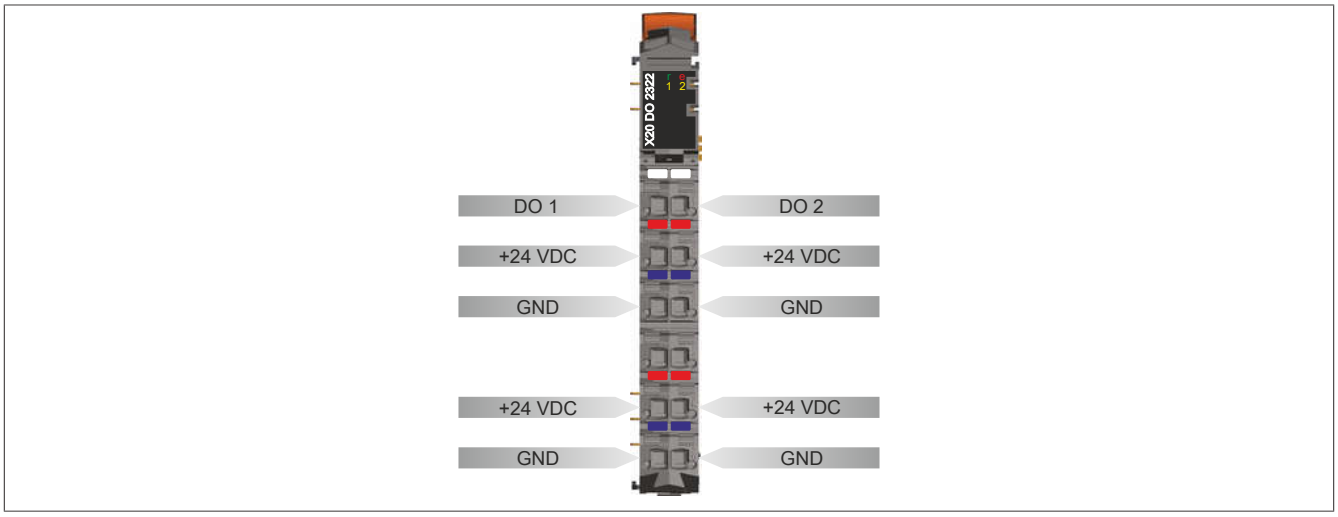

2.4 Connection example

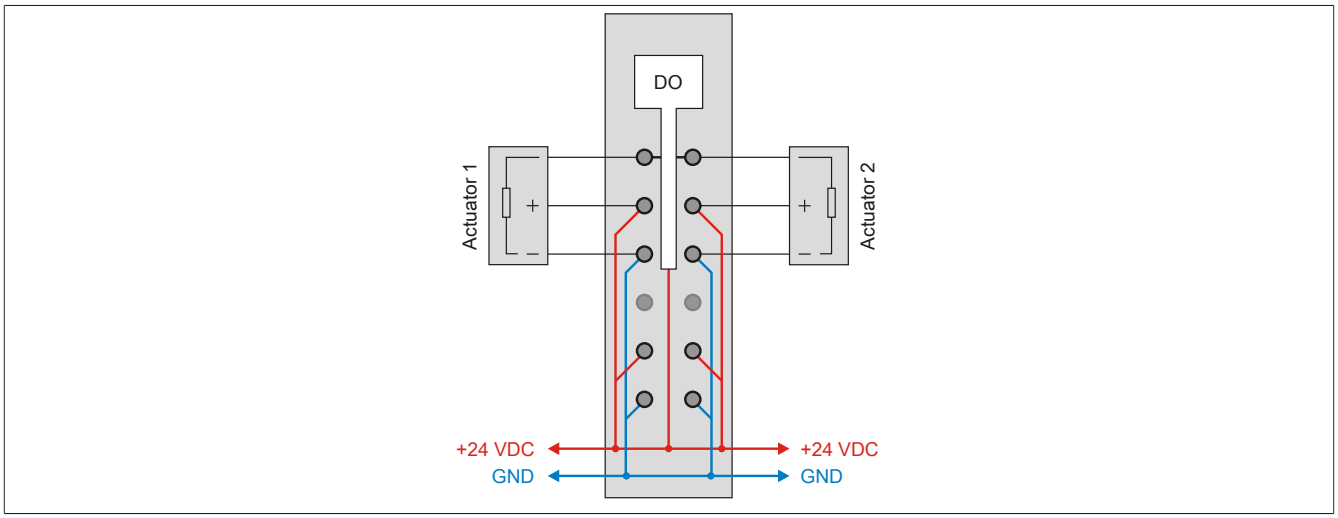

Caution!

If the module is operated outside specifications, the output current may rise above the maximum permissible nominal current. This applies both to individual channels and to the summation current of the module.

Appropriate cable cross-sections or external safety measures must therefore be provided.

2.5 Output circuit diagram

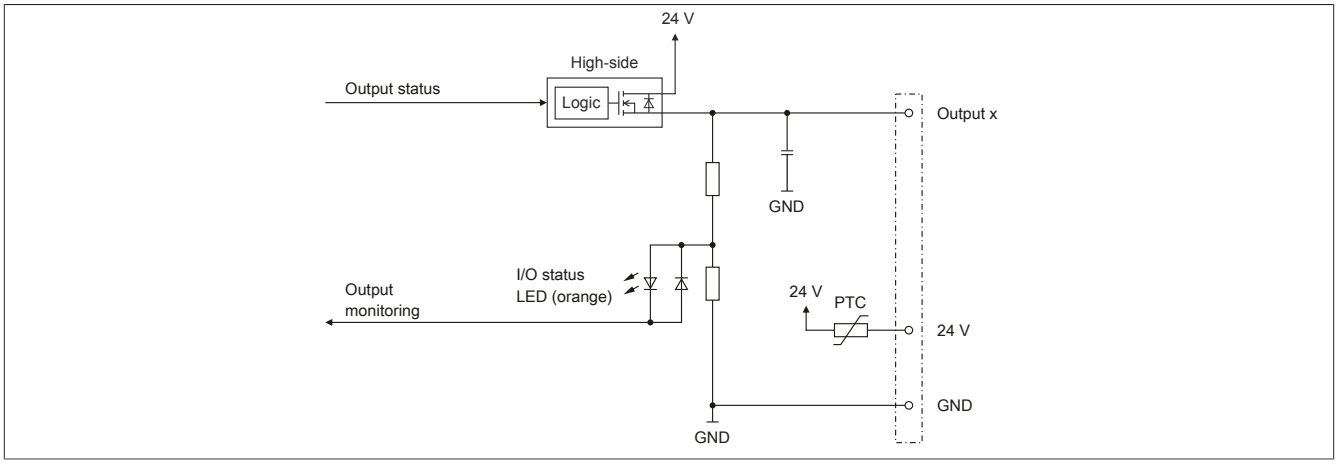

2.6 Switching inductive loads

Ambient temperature: 60°C, all outputs with the same load

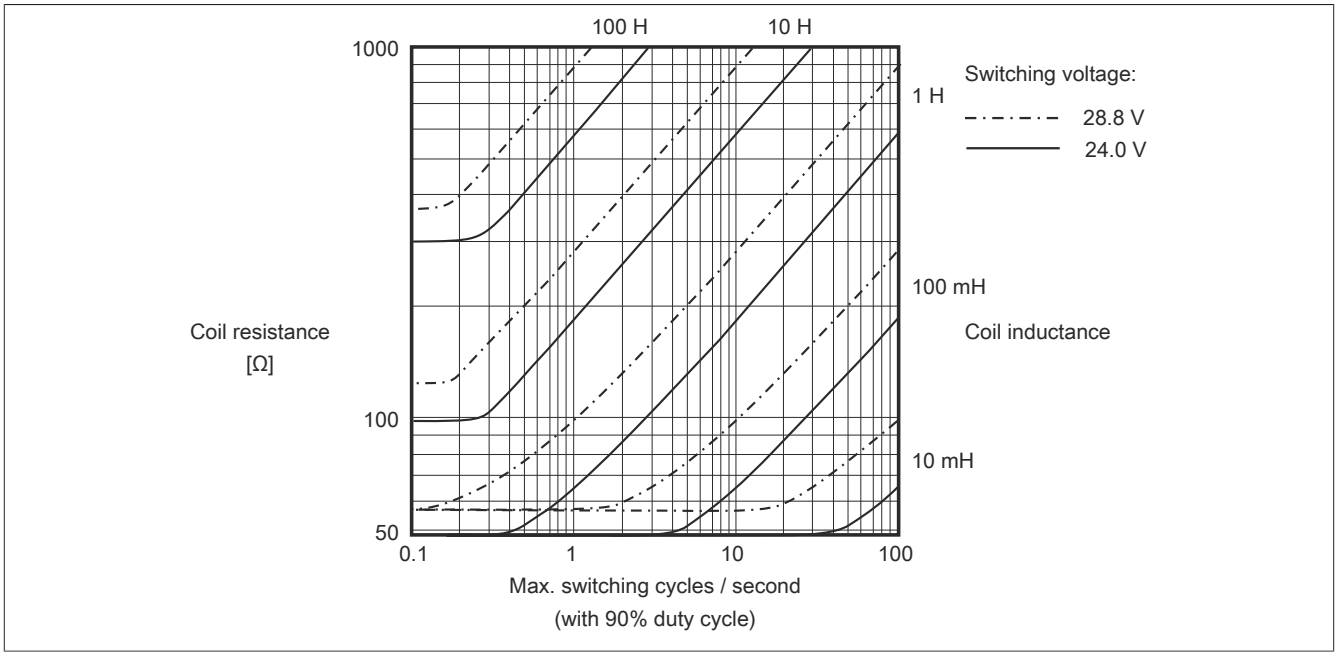

Information:

If the maximum number of operating cycles per second is exceeded, an external inverse diode must be used.

Operating conditions outside of the area in the diagram are not permitted!

3 Function description

3.1 Digital outputs

The module is equipped with 2 digital outputs.

The output state is transferred to the output channels with a fixed offset (<60 µs) in relation to the network cycle (SyncOut).

Packed outputs (only function model 0 - Standard)

Setting "Packed outputs" in the Automation Studio I/O configuration can be used to determine whether all bits of the register should be applied as individual data points in the Automation Studio I/O mapping (e.g. "DigitalOutput01 to DigitalOutputxx") or whether the register should be displayed as a single USINT data point (e.g. "DigitalOutput").



Information:

The register is described in "Switching state of digital outputs 1 to 2" on page 12.

3.1.1 Monitoring status of the outputs

On the module, the output states of the outputs are compared to the target states. The control of the output driver is used for the target state.

A change in the output state resets monitoring for that output. The status of each individual channel can be read out. A change in the monitoring status is actively transmitted as an error message.

Supervision status	Description
0	Digital output channel: No error
1	Digital output channel: • Short circuit or overload • Channel switched on and missing I/O power supply • Channel switched off and external voltage applied to channel



Information:

The register is described in "Status of digital outputs 1 to 2" on page 12.

3.2 OSP mode

In function model "OSP" (Operator Set Predefined), the user defines a digital pattern. This OSP value is output as soon as the communication between the module and master is aborted.

3.2.1 Hardware requirements

In order to use OSP mode sensibly, it should be ensured when setting up the application that the power supply of the output module and controller are designed to be independent of each other.

3.2.2 Functionality

The user has the choice between 2 OSP modes:

- Retain last valid value
- Replace with static value

In the first case, the module retains the last value recognized as a valid output status.

When selecting mode "Replace with static value", a plausible output value must be entered in the associated value register. When an OSP event occurs, this value is output instead of the value currently requested by the task.

If an OSP event occurs, e.g. communication between the module and master controller aborted, then bit OSPValid is reset on the module. The module enters the OSP state and output occurs according to the configuration in register OSPMode.

The following generally applies:

Even after regeneration of the communication channel, the OSP replacement value is still pending. The OSP state is only exited again when a set OSPValid bit is transferred.

When the master controller is restarted, bit OSPValid bit is reinitialized in the master controller. It must be set once more by the application and transferred via the bus.
In the event of brief communication errors between the module and master controller (e.g. due to EMC), the cyclic registers fail to refresh for several bus cycles. Within the module, bit OSPValid is reset; the set bit is retained in the controller, however. During the next successful transfer, the module-internal OSPValid bit is set again and the module automatically returns to normal mode.

If the task in the master controller needs the information about which output mode the module is currently in, bit ModulOK can be evaluated.



Warning!

If bit OSPValid bit is reset to "0" by the module, the output status no longer depends on the responsible task in the master controller. Nevertheless, output is made depending on the configuration of the OSP replacement value.



Information:

The registers are described in "Function model "OSP"" on page 13.

4 Commissioning

4.1 Using the module on the bus controller

Function model 254 "Bus controller" is used by default only by non-configurable bus controllers. All other bus controllers can use other registers and functions depending on the fieldbus used.

For detailed information, see section "Additional information - Using I/O modules on the bus controller" in the X20 user's manual (version 3.50 or later).

4.1.1 CAN I/O bus controller

The module occupies 1 digital logical slot on CAN I/O.

5 Register description

5.1 General data points

In addition to the registers described in the register description, the module has additional general data points. These are not module-specific but contain general information such as serial number and hardware variant.

General data points are described in section "Additional information - General data points" in the X20 System user's manual.

5.2 Function model 0 - Standard

Register	Fixed offset	Name	Data type	Read		Write	
				Cyclic	Acyclic	Cyclic	Acyclic
2	0	DigitalOutput	USINT			•	
		DigitalOutput01	Bit 0				
		DigitalOutput02	Bit 1				
30	1	StatusInput01	USINT	•			
		StatusDigitalOutput01	Bit 0				
		StatusDigitalOutput02	Bit 1				

Fixed modules require their data points to be in a specific order in the X2X frame. Cyclic access occurs according to a predefined offset, not based on the register address.

Acyclic access continues to be based on the register numbers.

5.3 Function model 1 - OSP

Register	Fixed offset	Name	Data type	Read		Write	
				Cyclic	Acyclic	Cyclic	Acyclic
2	0	Switching state of digital outputs 1 to 2	USINT			•	
		DigitalOutput01	Bit 0				
		DigitalOutput02	Bit 1				
30	1	Status of digital outputs 1 to 2	USINT	•			
		StatusDigitalOutput01	Bit 0				
		StatusDigitalOutput02	Bit 1				
34	1	Enabling OPS output in the module	USINT			•	
		OSPValid	Bit 0				
32	-	CfgOSPMode	USINT				•
36	-	CfgOSPValue	USINT				•

Fixed modules require their data points to be in a specific order in the X2X frame. Cyclic access occurs according to a predefined offset, not based on the register address.

Acyclic access continues to be based on the register numbers.

5.4 Function model 254 - Bus Controller

Register	Offset[1)]	Name	Data type	Read		Write	
				Cyclic	Acyclic	Cyclic	Acyclic
2	0	Switching state of digital outputs 1 to 2	USINT			•	
		DigitalOutput01	Bit 0				
		DigitalOutput02	Bit 1				
30	-	Status of digital outputs 1 to 2	USINT		•		
		StatusDigitalOutput01	Bit 0				
		StatusDigitalOutput02	Bit 1				

1) The offset specifies where the register is within the CAN object.

5.5 Digital outputs

5.5.1 Switching state of digital outputs 1 to 2

Name:
DigitalOutput
DigitalOutput01 to DigitalOutput02

This register is used to store the switching state of digital outputs 1 to 2.

Data type	Values	Information[1)]
USINT	0 to 3	Packed outputs = On Data point: "DigitalOutput"
	See the bit structure.	Packed outputs = Off or function model ≠ 0 - Standard. Data points: "DigitalOutput01" to "DigitalOutput02"

1) See "Digital outputs" on page 8.

Bit structure:

Bit	Name	Value	Information
0	DigitalOutput01	0	Digital output 01 reset
		1	Digital output 01 set
1	DigitalOutput02	0	Digital output 02 reset
		1	Digital output 02 set

5.6 Monitoring status of the digital outputs

On the module, the output states of the outputs are compared to the target states.

5.6.1 Status of digital outputs 1 to 2

Name:
StatusInput01
StatusDigitalOutput01 to StatusDigitalOutput02

The status of digital outputs 1 to 2 is mapped in this register.

Data type	Values	Information[1)]
USINT	0 to 3	Packed outputs = On Data point: "StatusInput01"
	See the bit structure.	Packed outputs = Off or function model ≠ 0 - Standard. Data points: "StatusDigitalOutput01" to "StatusDigitalOutput02"

1) See "Digital outputs" on page 8.

Bit structure:

Bit	Name	Value	Information
0	StatusDigitalOutput01	0	Channel 01: No error
		1	Channel 01: • Short circuit or overload • Channel switched on and missing I/O power supply • Channel switched off and external voltage applied to channel
1	StatusDigitalOutput02	0	Channel 02: No error
		1	Channel 02: For error description, see channel 01

5.7 Function model "OSP"

In function model "OSP" (Operator Set Predefined), the user defines a digital pattern. This OSP value is output as soon as the communication between the module and master is aborted.

5.7.1 Enabling OPS output in the module

Name:
OSPValid

This data point makes it possible to start the output of the module and request the use of OSP during operation.

Bit OSPValid exists once on the module and is managed by the user task. It must be set to start the enabled channels. As long as bit OSPValid remains set in the module, the module behaves the same as in function model "Standard".

Data type	Values
USINT	See the bit structure.

Bit structure:

Bit	Description	Value	Information
0	OSPValid	0	Request OSP operation (after initial startup or module in standby)
		1	Request normal operation
1 - 7	Reserved	0	

5.7.2 Setting OSP mode

Name:
CfgOSPMode

This register controls the behavior of a channel when using OSP.

Data type	Values	Explanation
USINT	0	Replace with static value
	1	Retain last valid value

5.7.3 Defining an OSP-digital output value

Name:
CfgOSPValue

This register contains the digital output value that is output in "Replace with static value" mode during OSP mode.

Data type	Values
USINT	See the bit structure.

Bit structure:

Bit	Description	Value	Information
0		0 or 1	OSP output value for channel DigitalOutput00
...		...	
x		0 or 1	OSP output value for channel DigitalOutput0x



Warning!

"OSPValue" is only applied by the module if bit "OSPValid" has been set in the module.

5.8 Minimum cycle time

The minimum cycle time specifies how far the bus cycle can be reduced without communication errors occurring. It is important to note that very fast cycles reduce the idle time available for handling monitoring, diagnostics and acyclic commands.

Minimum cycle time
100 µs

5.9 Minimum I/O update time

The minimum I/O update time specifies how far the bus cycle can be reduced so that an I/O update is performed in each cycle.

Minimum I/O update time
Equal to the minimum cycle time