DATASHEET

SPRING LOADED TOGGLE LATCH 40013 ZI

DESCRIPTION:

Robust latch with fully enclosed mechanism which gives wide positioning tolerance.

Assembly rivets and compression springs made from stainless steel 18/8
Suitable for screw fixing using M3.5 screws or welding
Maximum operating tension: 35 daN
Latch to catch distance: 48 mm

Supplied with dimensions template for marking out and catch.

FEATURES:

- Finish: Zinc Plated
- Material: Steel
- Dimensions: 57 x 28 x 10.5 mm
- Depth: 10.5 mm
- Length: 57 mm
- Width: 28.0 mm

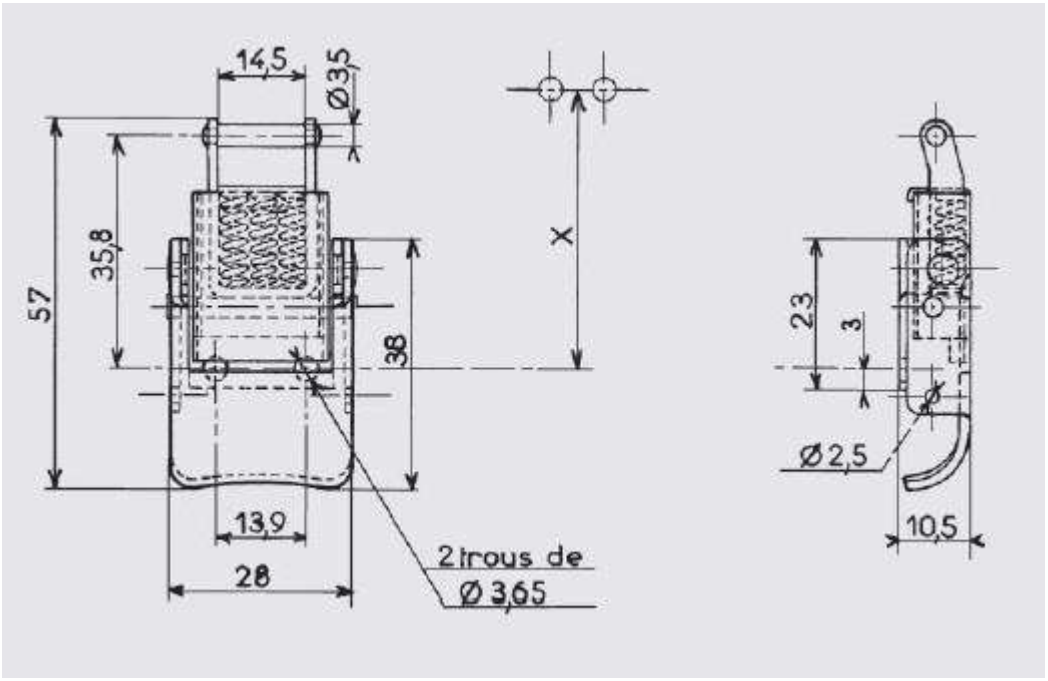
14,5
Ø3,5
57
35,8
38
X
13,9
28
2 trous de
Ø 3,65
23
3
Ø2,5
10,5

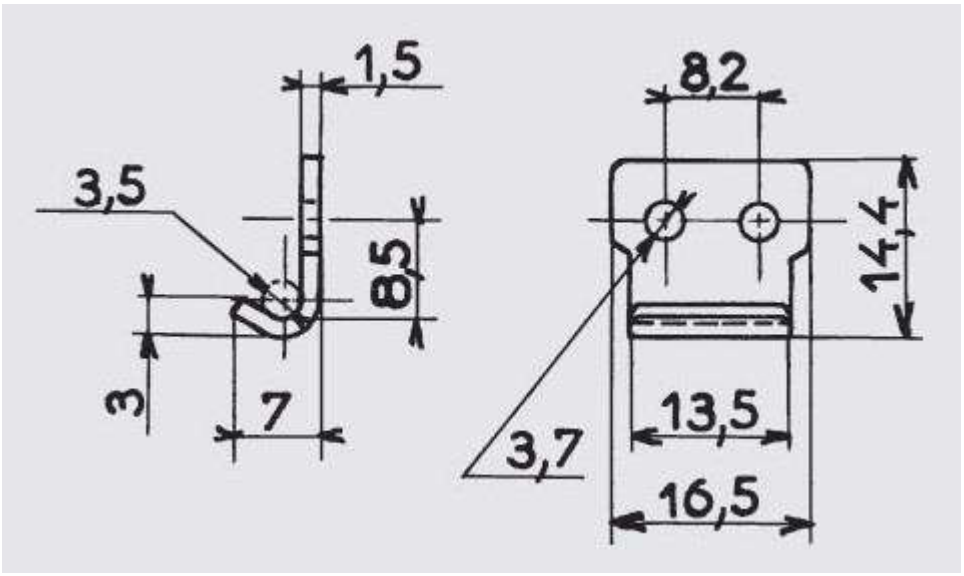
1,5
3,5
8,5
3
7
8,2
14,4
13,5
3,7
16,5