AB105LDA Alarm Horn Sounder & LED Beacon

The AB105LDA combines a compact high output 113dB(A) alarm sounder with a powerful multi-function L.E.D. beacon. Featuring 64 alarm tone frequencies and 4 remotely activated stages/channels.

The low current consumption and high SPL in a robust fire retardant enclosure ensure the AB105LDA is suitable for all general signalling applications. The alarm horn sounder & LED beacon may be connected from a single or separate supplies for simultaneous or independent operation. The DC voltage versions feature 6 user selectable flash modes including rotating, flashing and steady. An alternative second stage beacon mode can be remotely activated via a third wire (as can alternative alarm tones on the horn sounder) enabling an audible and visual communication of a two stage alarm condition.

Features

- Automatic synchronisation on multi-sounder system
- Synchronised flash rates
- Continuously rated
- Stainless steel fixings
- Unit can be mounted using external lugs or internal fixing positions
- Dual M20x1.5mm threaded cable entries – adaptors available
- Duplicate pluggable cable terminations – Class A
- Diode polarized for use in supervised circuits
- 64 alarm tone frequencies and 4 remotely activated alarm stages
- Available with custom tone configurations and frequencies
- 6 LED beacon modes including rotating and steady functions
- DC voltage units feature a second remotely selectable beacon mode stage
- Can be mounted in any orientation



Approvals

- UKCA
- CE
- EAC: CU TR 04/2011 CU TR 20/2011
- Russian Marine Register of Shipping



Specification

Alarm Horn:	
Maximum output:	113dB(A) @ 1 m ±3dB [104dB(A) @ 10ft/3m ±3dB]
Nominal output:	106dB(A) @ 1m ±3dB [97dB(A) @ 10ft/3m ±3dB]
No. of tones:	64 (UKOOA / PFEER compliant)
No. of stages:	4
Volume control:	-12dB(A) tone dependent
Effective range:	58m/190ft @ 1KHz
In rush:	636mA within 4.0ms @ 24Vdc
Stage switching:	Negative (common positive)
LED Beacon:	
Light source:	Array of 16 multi-function high power L.E.Ds
Operating modes:	4 rotating configurations 4 flashing configurations Steady mode for indicator / status applications
Peak/Effective Intensity cd:	19 cd* – measured ref. to I.E.S.
No. of stages:	DC unit also features a remotely selectable 2nd stage flash pattern.
LED/lens colours:	Amber, Blue, Clear (white LEDs), Green, Red & Yellow
General:	
Ingress protection:	IP65
Enclosure:	High impact UL94 V0 & 5VA FR ABS/PC
Lens colour filter:	Field replaceable UV stable PC
Terminals:	0.5 – 2.5mm² (20-14 AWG)
Line monitoring:	Diode polarized for use in supervised circuits
Operating:	-40 to +66°C [-40° to +151°F]
Storage:	-40 to +70°C [-40° to +158°F]
Relative humidity:	95% at 20°C [68°F]
Weight DC:	1.00kg / 2.20lbs
Weight AC:	1.25kg / 2.75lbs

Part Codes

Variable:	Identifier:	Description:
Product type:	AB105LDA	Combined alarm horn sounder & LED beacon
Voltage:	DC024 AC230	24Vdc (10-50Vdc) 90-253Vac/dc 50/60Hz
Back box/cable entries: [e]	A B	Back box with mounting lugs – 2 x M20x1.5mm entries Back box with mounting lugs – 2 × 1/2"NPT (adaptors)
Stopping plug material: [m]	A	ABS
Equip. tag/Duty label: [s]	0 1 2	No equip. tag or Duty label 316 (A4) St/St Equip. tag/Duty label Metalised Polyester Equip. tag/Duty label
Product version: [v]	A	RMRS, EAC, CE, UKCA
Product option: [o]	1 X Z	Standard product Custom configuration – contact E2S Custom alarm tone software – contact E2S
Enclosure: [x]	R G	Red (RAL 3000) Grey (RAL7038)
Lens colour: [y]	A B C G R Y	Amber Blue Clear Green Red Yellow

Multi-function patterns

Mode:	Stage 1	Stage2 [DC only]
1	All L.E.D's on	Alternate Side Flash 2Hz
2	Rotating: Slow1	Alternate Side Flash 2Hz
3	Single Strike Flash 2Hz	Rotating: Fast 2
4	Rotating: Fast 1	Single Strike Flash 2Hz
5	Rotating: Slow 2	Double Strike Flash 1Hz
6	Double Strike Flash 2Hz	Rotating: Fast 2
7	Rotating: Fast 2	Double Strike Flash 2Hz
8	Double Strike Flash 1Hz	Alternate Side Flash 2Hz
9	Alternate Side Flash 2Hz	Rotating: Fast 2

Current Consumption

Product Version:	Nominal Voltage:	Voltage Range:	Beacon Current:	Horn Current:
DC024	12Vdc 24Vdc 48Vdc	10-50Vdc	250mA 250mA 250mA	17mA 33.5mA 113mA
AC230	115Vac 230Vac	90-253Vac/dc 50/60Hz	90mA 50mA	25mA 17mA

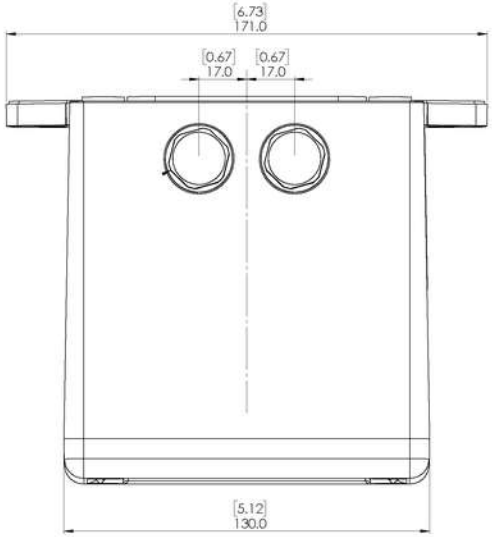

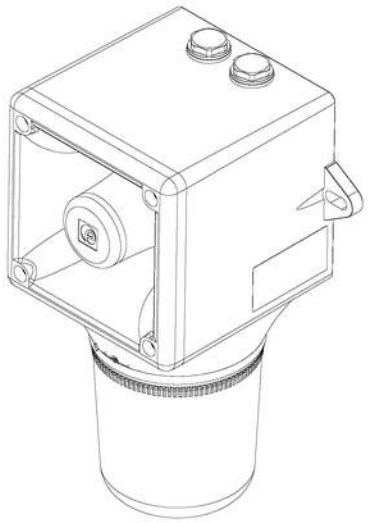

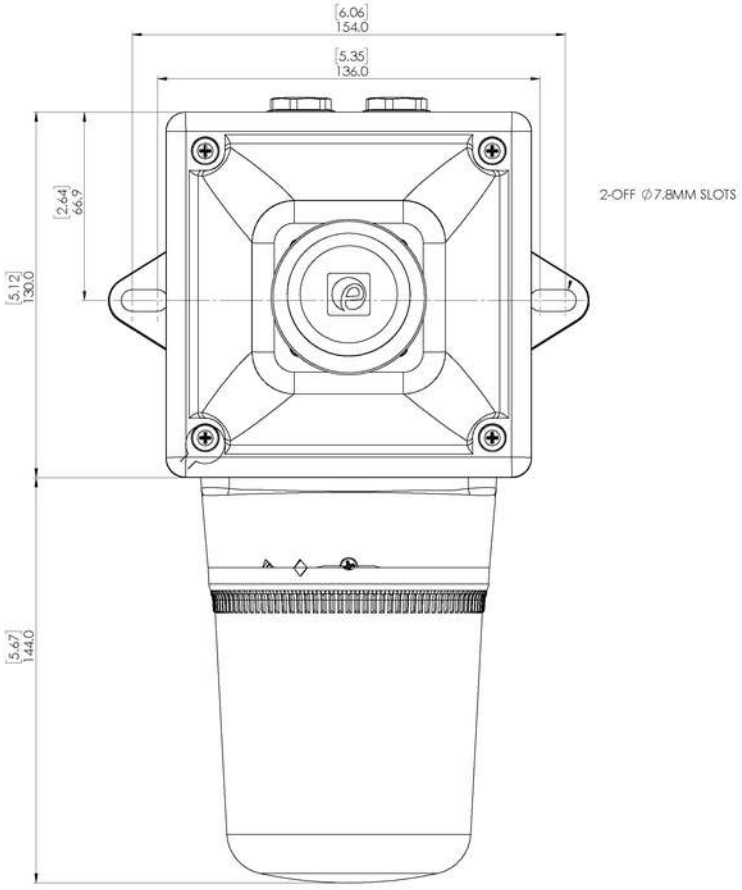

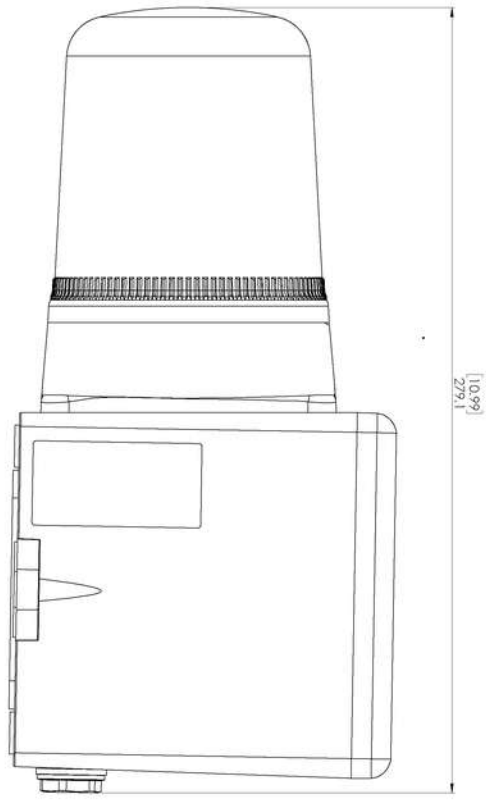

Tone table

S 1	Description	S 2	S 3	S 4
T 1	1000 Continuous - PFEER Toxic Gas	Any	T 2	T 44
T 2	1200/500 @ 1Hz Sweeping - DIN / PFEER P.T.A.P.	Any	T 3	T 44
T 3	1000 @ 0.5Hz (1s on, 1s off) Intermittent - P...	Any	T 2	T 44
T 4	1.4KH-1.6KHz 1s, 1.6KHz-1.4KHz 0.5s - NF C 48...	Any	T 24	T 1
T 5	544(100mS)/440 (400mS) - NF S 32-001	Any	T 19	T 1
T 6	1500/500 - (0.5s on , 0.5s off) x3 + 1s gap -...	Any	T 44	T 1
T 7	500-1500Hz Sweeping 2 sec on 1 sec off - AS4428	Any	T 44	T 1
T 8	500/1200Hz @ 0.26Hz(3.3s on, 0.5s off) - NEN ...	Any	T 24	T 35
T 9	1000 (1s on, 1s off)x7 + (7s on, 1s off) - IM...	Any	T 34	T 1
T 10	1000 (1s on, 1s off)x7 + (7s on, 1s off) - IM...	Any	T 34	T 1
T 11	420(0.5s on, 0.5s off)x3 + 1s gap - ISO 8201 ...	Any	T 1	T 8
T 12	1000(0.5s on, 0.5s off)x3 + 1s gap - ISO 8201...	Any	T 1	T 8
T 13	422/775 - (0.85 on, 0.5 off) x3 + 1s gap - ...	Any	T 1	T 8
T 14	1000/2000 @ 1Hz - Singapore	Any	T 3	T 35
T 15	300 Continuous	Any	T 24	T 35
T 16	440 Continuous	Any	T 24	T 35
T 17	470 Continuous	Any	T 24	T 35
T 18	500 Continuous - IMO code 2 (Low)	Any	T 24	T 35
T 19	554 Continuous	Any	T 24	T 35
T 20	660 Continuous	Any	T 24	T 35
T 21	800 Continuous - IMO code 2 (High)	Any	T 24	T 35
T 22	1200 Continuous	Any	T 24	T 35
T 23	2000 Continuous	Any	T 3	T 35
T 24	2400 Continuous	Any	T 20	T 35
T 25	440 @ 0.83Hz (0.60s on, 0.60s off) Intermittent	Any	T 44	T 8
T 26	470 @ 0.9Hz (0.55s on, 0.55s off) Intermittent	Any	T 44	T 8
T 27	470 @ 5Hz (0.10s on, 0.10s off) Intermittent	Any	T 44	T 8
T 28	544 @ 1.14Hz (0.43s on, 0.44s off) Intermittent	Any	T 24	T 8
T 29	655 @ 0.875Hz (0.57s on, 0.57s off) Intermittent	Any	T 44	T 8
T 30	660 @ 0.28Hz (1.80s on, 1.80s off) Intermittent	Any	T 24	T 8
T 31	660 @ 3.3Hz (0.15s on, 0.15s off) Intermittent	Any	T 24	T 8
T 32	745 @ 1Hz (0.50s on, 0.50s off) Intermittent	Any	T 24	T 8
T 33	800 (0.25s on, 1.00s off) Intermittent	Any	T 24	T 8
T 34	800 @ 2Hz (0.25s on, 0.25s off) - IMO code 3....	Any	T 24	T 8
T 35	1000 @ 1Hz (0.50s on, 0.50s off) Intermittent	Any	T 24	T 8
T 36	2400 @ 1Hz (0.50s on, 0.50s off) Intermittent	Any	T 24	T 8
T 37	2900 @ 5Hz (0.10s on, 0.10s off) Intermittent	Any	T 24	T 8
T 38	363/518 @ 1Hz (0.50s / 0.50s) Alternating	Any	T 8	T 19
T 39	450/500 @ 2Hz (0.25s / 0.25s) Alternating	Any	T 8	T 19
T 40	554/440 @ 1Hz (0.50s / 0.50s) Alternating	Any	T 24	T 19
T 41	554/440 @ 0.65Hz (0.76s / 0.76s) Alternating	Any	T 8	T 19
T 42	561/760 @ 0.83Hz (0.60s / 0.60s) Alternating	Any	T 8	T 19
T 43	780/600 @ 0.96Hz (0.52s / 0.52s) Alternating	Any	T 8	T 19
T 44	800/1000 @ 2Hz (0.25s / 0.25s) Alternating	Any	T 24	T 19
T 45	970/800 @ 2Hz (0.25s / 0.25s) Alternating	Any	T 8	T 19
T 46	800/1000 @ 0.875Hz (0.57s / 0.57s) Alternating	Any	T 24	T 19
T 47	2400/2900 @ 2Hz (0.25s / 0.25s) Alternating	Any	T 24	T 19
T 48	500/1200 @ 0.3Hz (1.67s / 1.67s) Sweeping	Any	T 24	T 12
T 49	560/1055 @ 0.18Hz (2.73s / 2.73s) Sweeping	Any	T 24	T 12
T 50	560/1055 @ 3.3Hz (0.15s / 0.15s) Sweeping	Any	T 24	T 12
T 51	600/1250 @ 0.125Hz (4s / 4s) Sweeping	Any	T 24	T 12
T 52	660/1200 @ 1Hz (0.50s / 0.50s) Sweeping	Any	T 24	T 12
T 53	800/1000 @ 1Hz (0.50s / 0.50s) Sweeping	Any	T 24	T 12
T 54	800/1000 @ 7Hz (0.07s / 0.07s) Sweeping	Any	T 24	T 12
T 55	800/1000 @ 50Hz (0.01s / 0.01s) Sweeping	Any	T 24	T 12
T 56	2400/2900 @ 7Hz (0.07s / 0.07s) Sweeping	Any	T 24	T 12
T 57	2400/2900 @ 1Hz (0.50s / 0.50s) Sweeping	Any	T 24	T 12
T 58	2400/2900 @ 50Hz (0.01s / 0.01s) Sweeping	Any	T 24	T 12
T 59	2500/3000 @ 2Hz (0.25s / 0.25s) Sweeping	Any	T 24	T 12
T 60	2500/3000 @ 7.7Hz (0.65s / 0.65s) Sweeping	Any	T 24	T 12
T 61	800Hz Motor Siren	Any	T 24	T 12
T 62	1200Hz Motor Siren	Any	T 24	T 12
T 63	2400Hz Motor Siren	Any	T 24	T 12
T 64	Simulated Bell	Any	T 21	T 12

No liability is accepted for any consequence of the use of this document. The technical specification of this unit is subject to change without notice due to our policy of continual product development. All dimensions are approximate. This unit is sold subject to our standard conditions of sale, a copy of which is available on request.