ITW Switches

SERIES 59 – MINIATURE SEALED PUSHBUTTON

The Series 59 is a range of miniature, momentary action, rugged panel sealed pushbutton switches.

The Series is available with square or round bezel versions, with or without LED status illumination.

A locknut is supplied with each switch. A choice of body material is provided of either a non spark zinc alloy or a hard wearing moulded PBT therefore making this switch suitable for use in most applications.

It is panel sealed to IP67 and is designed to be impact resistant. The small size, robustness and panel sealing make this switch ideal in harsh environments.



Non-Illuminated Version

The non-illuminated range includes a choice of 7 button colours with solder terminal connection. PCB terminals, a high round bezel, surface and sublimation printing are available as non-standard.

Status Illuminated Version

An illuminated version is available in the round bezel versions with a choice of 3 button colours and 2 high brightness LED colours. Non standard options include additional button and LED colours (subject to minimum order quantities).

APPLICATIONS:

- Communications
- Instrumentation
- Data entry
- Military environments
- Environmentally demanding keypads
- Mass transport controls

KEY FEATURES:

- Non-spark material
- Wide temperature range
- Panel sealed – To IP67
- High environmental specifications
- Gold contacts
- Status illumination

NON-STANDARD OPTIONS:

- Overboot available for protection against icing
- Surface or sublimation legend printing on the button (non-illuminated version)

Contact an Authorized Distributor or Factory for Pricing

PRODUCT DRAWINGS

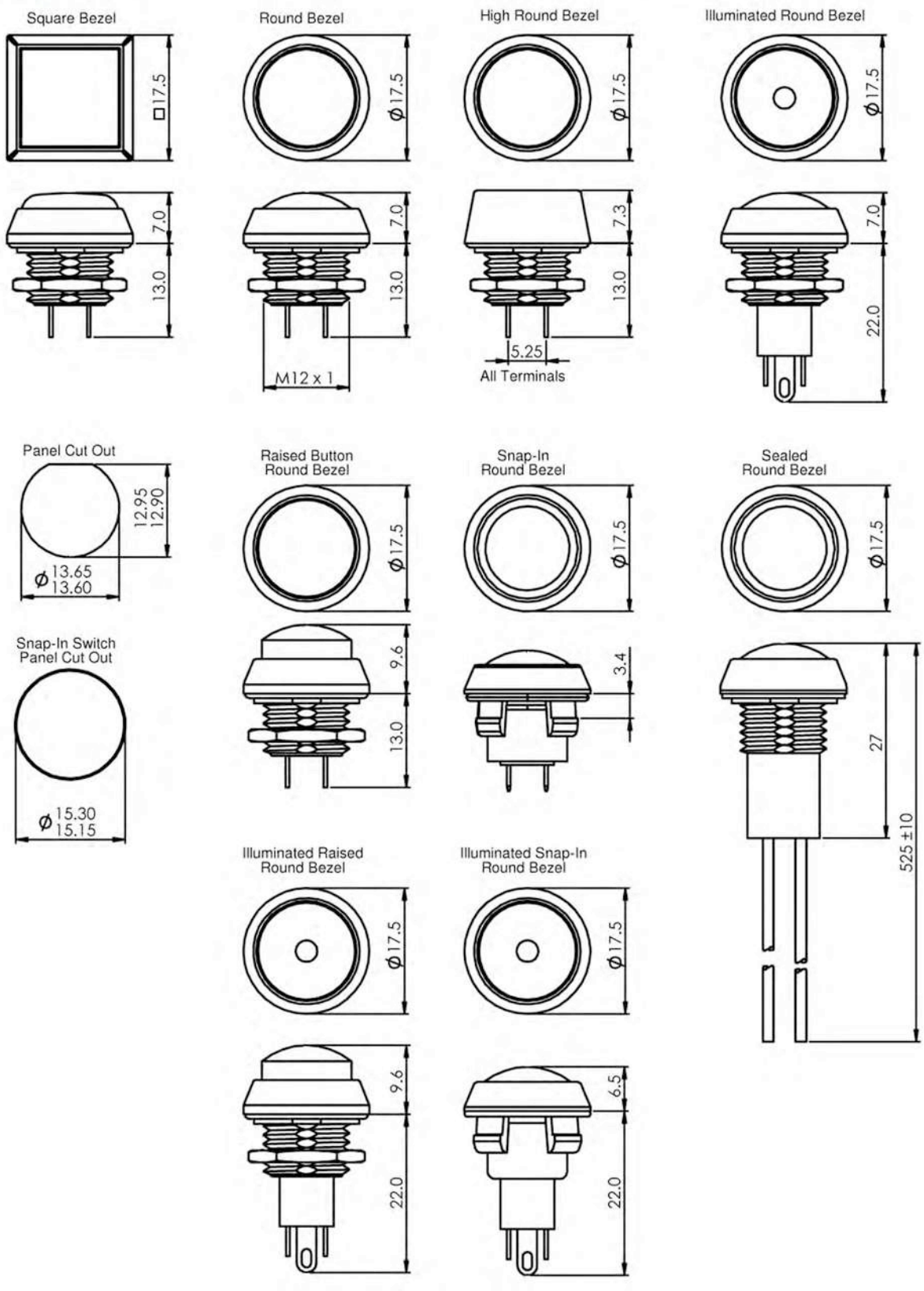

All dimensions in Millimetres

Contact an Authorized Distributor or Factory for Pricing

COVER SEAL



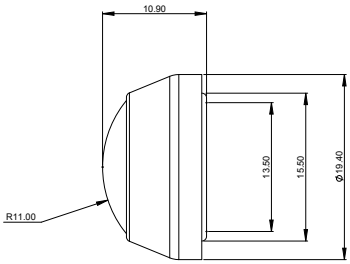

Part Number	Material
80-599189	COVER SEAL-CLEAR
80-599216	COVER SEAL (CLEAR SILICON)

CIRCUIT FORM:



INGRESS PROTECTION RATING KEY:

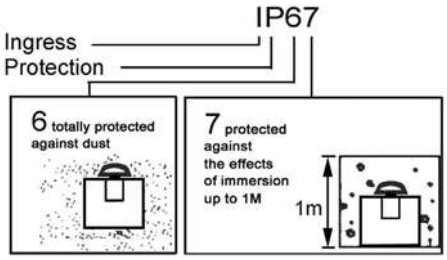

LED CHARACTERISTICS:

Typical fwd voltage (VF at I operating): 2.2V

Max fwd voltage (VF at I operating): 3.0V

Forward current (I operating): 20mA

PANEL MOUNTING & CONSTRUCTION INFORMATION:

The Series 59 mounts easily into panels of minimum 1.5mm and maximum 3mm thickness. Front panel sealing to IP67 is achieved by the use of a sealing 'O' ring which is fitted behind the bezel of the body of the switch before it is inserted into the panel hole cut out. It is held onto the panel by means of a brass locknut, tightened down by a 14mm spanner, to a torque of between 1.0Nm to 2.0Nm to achieve the correct sealing pressure.

A 'D' flat is provided to prevent rotation.

ORDERING INFORMATION:

Series	Body Style	Termination	Button Colour *	LED Colour **
59 -	1 - Round Bezel - Metal 2 - Square Bezel - Metal 3 - High Round Bezel - Metal 4 - Illuminated Round Bezel - Metal 5 - Round Bezel - Plastic 6 - Square Bezel - Plastic	1 - Solder terminals 2 - PCB terminals 3 - Sealed terminals	1 - Black 2 - Red 3 - Green 4 - White 5 - Yellow 6 - Blue 7 - Orange	R - Red G - Green

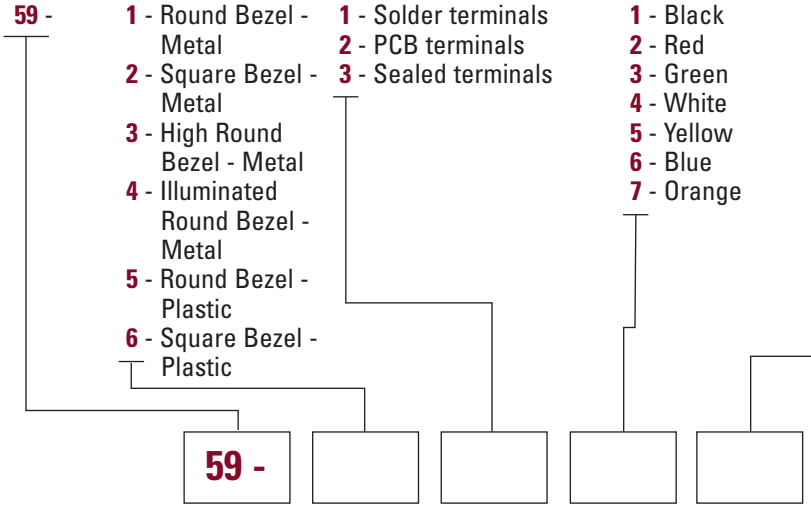

* Illuminated version only available with Black, Red & Green as standard. Non-standard colours subject to MOQ's.

** This digit is only required for illuminated switches.

Part Number	Description
59-900067	Rnd Plastic Snap In Red
59-900068	Rnd Plastic Snap In Black
59-900069	Rnd Plastic Snap In Green
59-900072	Rnd Plastic Snap In Blue
59-900073	Rnd Plastic Snap In Orange
59-900078	Rnd Metal Raised Button Orange
59-900089	Rnd Metal Raised Button Red
59-900090	Rnd Metal Raised Button Green
59-900091	Rnd Metal Raised Button Black
59-900122	Rnd Metal Raised Button Red LED Green
59-900124	Rnd Metal Raised Button Grn LED Black
59-900127	Rnd Metal Raised Button Grn LED Green
59-900181	Rnd Metal Raised Button Yellow
59-900201	Rnd Metal Raised Button Blue
59-900254	Rnd Plastic Raised Button Blue
59-900255	Rnd Plastic Raised Button Black
59-900260	Rnd Metal Raised Button White

MECHANICAL / ELECTRICAL CHARACTERISTICS:

Travel (nom): 2.3mm

Life (max): 1,000,000 cycles

Operating force (nom): 3N

Contact bounce (nom): 1ms

Panel thickness (max):
1.5 - 3mm

Panel cut out:
ø13.6mm (with 'D' flat)

SWITCH

Dielectric strength: 1000V a.c.

Insulation resistance: 1GΩ

Contact resistance: 50mΩ

Current rating (typical):
10mA at 5V d.c. resistive
100mA at 50V d.c. resistive
125mA at 125V a.c. resistive

Life (min): 500,000 cycles

Switching power (max):
16VA a.c.

Ingress protection:
IP67 (Panel Sealed)

Shock:
100g non - illuminated
40g illuminated

Vibration: DEF STD 07-55

Non-Illuminated

Operating temperature range:
-55°C to +125°C
with zinc alloy body
-40°C to +105°C with PBT body

Illuminated

Operating temperature range:
-35°C to +85°C

Body material:
Zinc alloy (standard) or PBT

Button material: PBT

Contacts: Gold plated nickel

Salt mist: BS2011 Part 2:1

Soldering information:
320°C max for 3s

Copyright © 2020. ITW Switches 11/2020

Designs and specifications are subject to change without notice due to product improvement.

ITW Switches

www.itwswitches.com