QS series

Snap-in panel mount LED indicators



DISTINCTIVE FEATURES

6 mm, 8 mm, 10 mm and 12 mm Ø cut-out sizes

Front panel snap-in mounting requires no additional hardware

Standard intensity diffused LED or high brightness LED for daylight viewing



GENERAL SPECIFICATIONS

- Operating Temperature Range: -30 °C to +65 °C (–22 °F to +149 °F)
- Max Reverse Voltage: 5 V
- Life Expectancy: 100,000 hours
- Max Panel Thickness: 0.8 to 1.6 mm

MATERIALS

- Moulded polycarbonate

MOUNTING

QS6 SERIES PANEL CUT-OUT

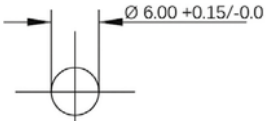

QS10 SERIES PANEL CUT-OUT

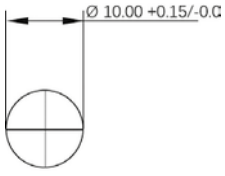

QS8 SERIES PANEL CUT-OUT

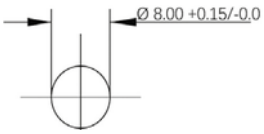

QS12 SERIES PANEL CUT-OUT

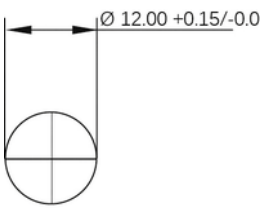

The company reserves the right to change specifications without notice.

LED characteristics are dependent upon environmental conditions. Therefore published data should be considered nominal and subject to variations.

QS series

Snap-in panel mount LED indicators

ELECTRICAL SPECIFICATIONS

STANDARD LED INTENSITY

LED COMPONENT SPECIFICATIONS			
	6 mm Intensity	8, 10 & 12 mm Intensity	Forward Voltage
HE Red	40 mcd	100 mcd	2.0 V
Green	40 mcd	60 mcd	2.2 V
Yellow	30 mcd	50 mcd	2.1 V
Blue	1,200 mcd	1,600 mcd	3.8 V
White (clear)	1,200 mcd	1,600 mcd	3.8 V
Bi-color (Typical) (Red/Green)	60 mcd	45 mcd	2.0 V
Tri-color (Typical) (Red/Green/Yellow)	-	60/15/13mcd	2.5 V

Bi-color - The color is changed by reversing the polarity of the supply voltage.
Tri-color - The indicator has red and green LEDs, when both connected yellow is produced.

HIGH BRIGHTNESS LED INTENSITY

LED COMPONENT SPECIFICATIONS			
	6 mm Intensity	8, 10 & 12 mm Intensity	Forward Voltage
HE Red	3,700 mcd	6,000 mcd	2.2 V
Green	2,000 mcd	1,900 mcd	3.2 V
Yellow	1,200 mcd	2,100 mcd	2.0 V
Orange	4,500 mcd	4,500 mcd	2.2 V

- The operating voltage must not be exceeded by more that 10% as this will result in reduced life expectancy
- Luminous intensity is measured at 20 mA on a discrete led unless otherwise stated.
- Luminous intensities and color shades of white LEDs may vary within a batch.
- Luminous intensity will be reduced with lower operating current.

Voltage	Operating Voltage (Min to Max)	Operating Current (Typical All Types)
02 (No Resistor)	2.1 to 3.3 VDC	20 mA max*
6 VDC	5.4 to 6.6 VDC	20 mA
12 VDC	10.8 to 13.2 VDC	20 mA
24 VDC	21.6 to 26.4 VDC	20 mA
28 VDC	25.2 to 30.8 VDC	20 mA
110 VAC (not available on QS6)	99 to 110 VAC	6 mA
220 VAC (not available on QS6)	207 to 253 VAC	3 mA

* Customer to supply resistor for desired operating current.

QS series

Snap-in panel mount LED indicators

BUILD YOUR PART NUMBER

QS _ _ _ _ _ _

SERIES

QS

MOUNTING HOLE

6	Ø6 mm
8	Ø8 mm
10	Ø10 mm
12	Ø12 mm

TERMINALS

1	Solder lug/faston
3	Wires

TYPE OF ILLUMINATION

XX	Fixed Light
YY	Bi-color
ZZ	Tri-color (10 mm only)
KK	Flashing light (12 - 28 VDC)

LED COLOR

R	Red
G	Green
Y	Yellow
B	Blue
W	White (clear)
O	Orange
HR	Hyper Bright Red
HG	Hyper Bright Green
HY	Hyper Bright Yellow
HO	Hyper Bright Orange
RG	Red/Green
RYG	Red/Yellow/Green (10 mm Only)

VOLTAGE

02	No resistor*
06	6 VDC
12	12 VDC
24	24 VDC
28	28 VDC
110	110 VAC
220	220 VAC

* please refer to the forward voltage in electrical specifications

ABOUT THIS SERIES

Notice: please note that not all combinations of above numbers are available. Not all LED flashing options are available in this range, please contact APEM.

- Gold solder lug/Faston terminal denotes Anode (+), silver terminal denotes Cathode (-)
- Standard wire length is 200mm, QS6 & QS8 24 AWG UL1061, QS10 & QS12 22 AWG UL1061, red wire denotes Anode (+), black wire denotes Cathode (-) for other wire lengths consult APEM
- For LEDs with alternate voltages and multi-voltage options consult APEM.
- Bi-color LEDs, by connecting the gold Faston (+) one color is produced, by reversing the supply voltage another color is produced. Bi-color are available up to 28 VDC.
- Take care when soldering (recommended solder temperature 270 °C - 2 sec).
- The Tri-color LED has red and green LEDs when both are connected yellow is produced.
- We recommend using high brightness LEDs for use at 220 VAC
- 6 mm not available in 110 VAC or 220 VAC
- Mains voltage product is not recommended for use on 3 phase appliances

QS series

Snap-in panel mount LED indicators

Ø 6 MM - SOLDER LUG TERMINALS



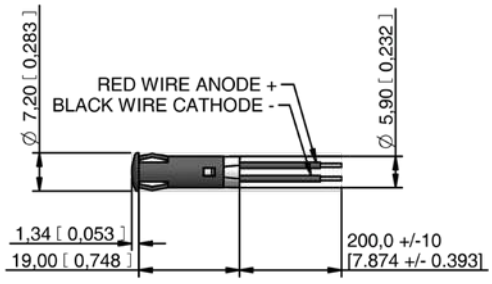

Ø 6 MM - WIRES TERMINALS



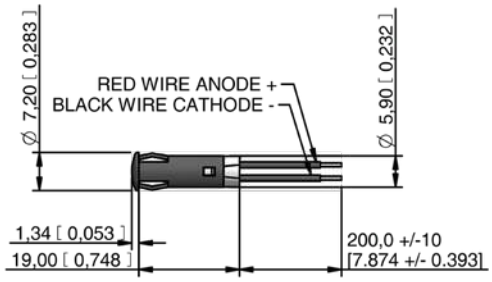

Ø 8 MM - SOLDER LUG / FASTON TERMINALS



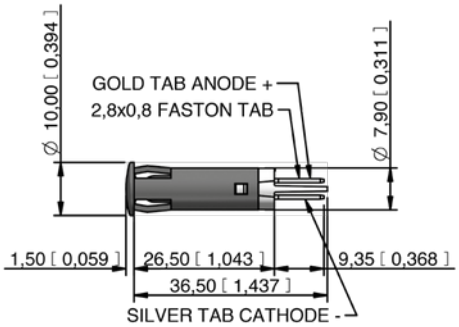

Ø 8 MM - WIRES TERMINALS



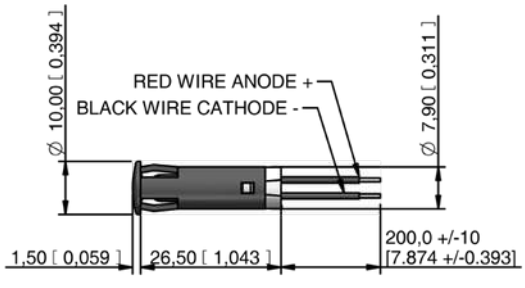

QS series

Snap-in panel mount LED indicators

Ø 10 MM - SOLDER LUG / FASTON TERMINALS



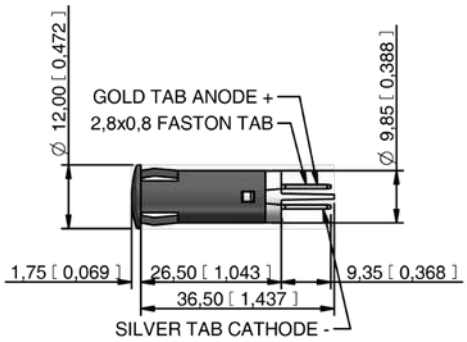

Ø 10 MM - WIRES TERMINALS



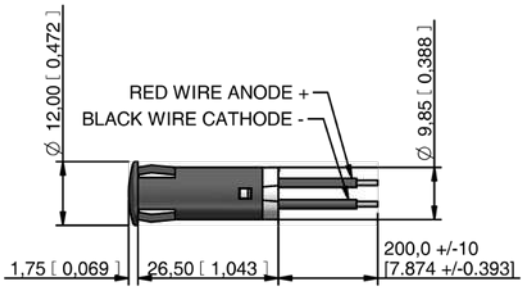

Ø 12 MM - SOLDER LUG / FASTON TERMINALS



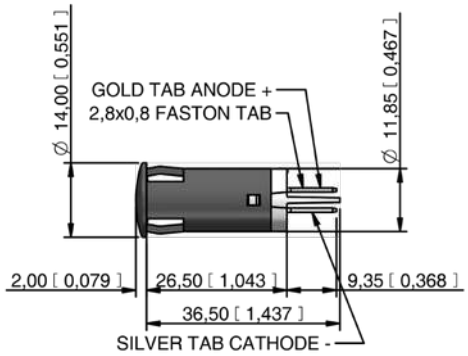

Ø 12 MM - WIRES TERMINALS



