MP1001 Industrial Grade



Solid State, magnetic proximity sensors in adjustable, threaded barrels.

- Immune to Hostile Environments
- High-Speed Capability
- Reverse Battery Protection to -24Vdc
- "CE Plus" Protection (with MP1001 Series)
- Sourcing or Open Collector Output
- MP100105 and MP100106 use Omnipolar GMR Sensing Element for Extra Wide Airgap
- South Pole Sensitive (except MP100105 and MP100106)
- M12 Integral Connector Meets IEC 60947-5-2

Open Collector Sinking Block Diagram

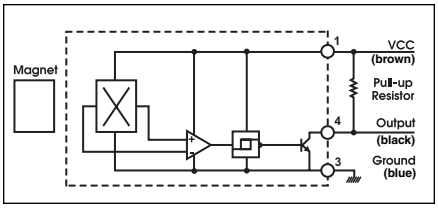

Sourcing Block Diagram

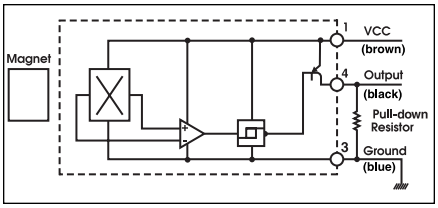

Part #	Operating Voltage Range (VDC)	Supply Current, mA max	Output	Output Saturation Voltage, mV max	Output Current, mA max	Operate Temp. Range, °C	Storage Temp. Range, °C	Operate Point, gauss (max.)	Release Point, gauss (min.)	Housing	Cable	Connector
MP100101	5 to 24	12	3-wire sink	700	25	-40 to 105	-40 to 105	300	60	SST		12mm circular
MP100102	5 to 24	12	3-wire sink	700	25	-40 to 125	-40 to 125	300	60	SST	22AWG x 1m BBB	
MP100103	5 to 24	12	3-wire source	Vcc-900 min	20	-40 to 105	-40 to 105	300	60	SST		12mm circular
MP100104	5 to 24	12	3-wire source	Vcc-900 min	20	-40 to 125	-40 to 125	300	60	SST	22AWG x 1m BBB	
MP100105	5 to 24	10	3-wire sink	700	24	-40 to 105	-40 to 105	25*	1*	SST		12mm circular
MP100106	5 to 24	10	3-wire sink	700	24	-40 to 125	-40 to 125	25*	1*	SST	22AWG x 1m BBB	

*The GMR IC is approximately .100" inside the barrel. Gauss figures at the barrel end will be somewhat higher. Consult Cherry Engineering for details.

MP1005 Commercial Grade



Dimensions

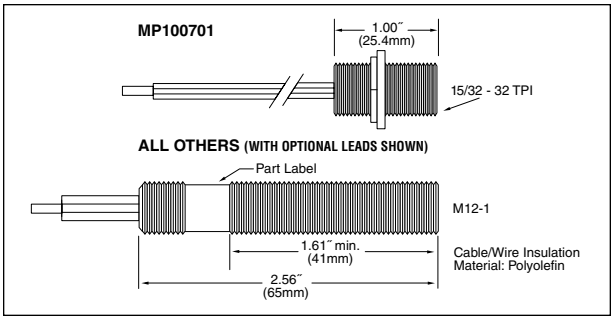

Part #	Operating Voltage Range (VDC)	Supply Current, mA max	Output	Output Saturation Voltage, mV max	Output Current, mA max	Operate Temp. Range, °C	Storage Temp. Range, °C	Operate Point, Gauss (max.)	Release Point, Gauss (min.)	Housing	Leads	Connector
MP100501	4.75 to 24	12	3-wire sink	700	25	-40 to 105	-40 to 105	300	60	Alum (red)		12mm circular
MP100502	4.75 to 24	12	3-wire sink	700	25	-40 to 125	-40 to 125	300	60	Alum (red)	20 AWG x 1m BBB	
MP100503	4.75 to 24	12	3-wire source	Vcc-200 min	25	-40 to 105	-40 to 105	300	60	Alum (red)		12mm circular
MP100504	4.75 to 24	12	3-wire source	Vcc-200 min	25	-40 to 125	-40 to 125	300	60	Alum (red)	20 AWG x 1m BBB	
MP100701	4.75 to 24	12	3-wire sink	700	25	-40 to 125	-40 to 125	300	60	Alum (black)	20 AWG x 1m BBB	