Brand of NTN corporation

Technical data

UKT210HCC

Bearing units

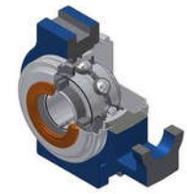

Grey cast housing, radial insert ball bearing with adapter sleeve,seal with slinger

KIT CONTENT

UK210G2H, SCO210-45, SCC210, T210N

VISUAL (S)

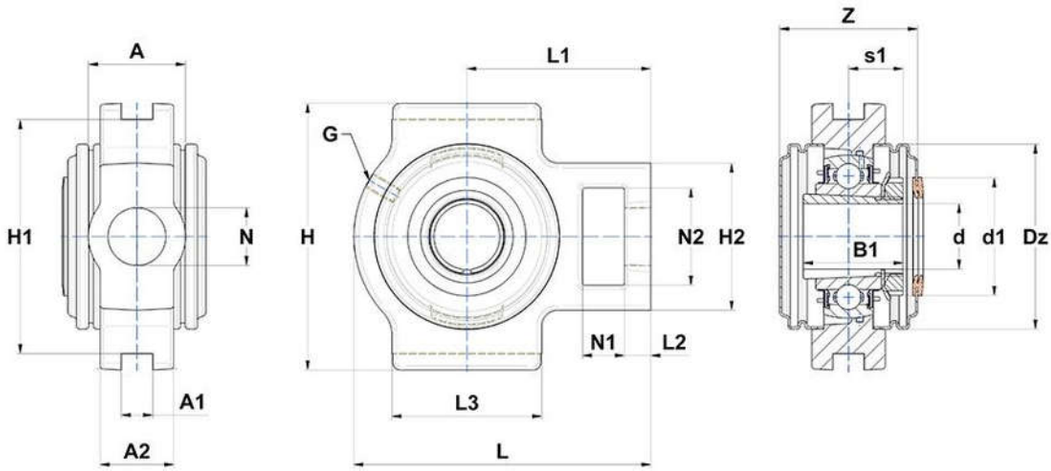

PRODUCT DEFINITION

Brand	SNR
A - Housing width	49 mm
A1 - Width of location slot	16 mm
A2	37 mm
B1 - Overall width Inner Ring	55 mm
d - Shaft diameter	45 mm

UKT210HCC
Bearing units

PRODUCT DEFINITION	
d1 - Outer dia of eccent. Lock. collar / nut of adapter sleeve	70 mm
Dz - Outer diameter of cover	100 mm
G - Grease fitting	M6x1
H - Housing length, width or diameter	117 mm
H1 - Distance between location slots	102 mm
H2 - Housing height / width	83 mm
L - Housing length	149 mm
L1 - Distance attachment end face to bearing centerline	90 mm
L2 - Thickness of attachment end	16 mm
L3 - Length of guidance slot/face	86 mm
N - Mounting hole dimension	29 mm
N1 - Length of attachment slot	19 mm
N2 - Height of attachment slot	49 mm
Z - Width over covers	74,6 mm

PRODUCT PERFORMANCE	
C - Dynamic load rating	35100000 mN
C0 - Static load rating	23200000 mN
Operating temperature min.	253,15 °K
Operating temperature max.	373,15 °K

OTHER FEATURES	
Mass	2,764 kg
Adapter sleeve designation	H2310