# RF 15, gold, full illumination, 2.9 ± 0.6 N, lamp red, bezel white, 1 NO



### fields of application

- Measurement-control-regulation
- Mechanical and system engineering
- Automotive
- Electro-medical

### special features

- Gold contacts, reliable switching with low currents
- Optional: spot illumination or full illumination
- Key grid 19.05 mm
- Overall height: 9.7 mm or 12.5 mm with keycap
- Terminal technology: THT

CE

## description

The RF 15 gold tactile switches have a 15 x 15 mm edge length, reliable gold contacts and a noticeable click. They are used in flat data entry keyboards under overlays or under keycaps, such as RAFI RK 90 keycaps.

Flat data entry keyboards with RF 15 elements should be constructed in a 19.05 mm grid. With this grid, strips of glue remain between the individual keys on the front panel. The overlay, which we recommend embossing above the key switches, can be glued onto these strips of glue.

RF 15, mit Gold-Kontakten, vollflächige Ausleuchtung der Blende zur Ausleuchtung von Fenstern in der Dekorfolie, bzw. transparenten Tastenkappen RK 90.

## technical data

**general**

| | |
|---|---|
| Bezel color | white |
| Luminous element color | red |
| Operating temperature, min. | -25 °C |
| Operating temperature, max. | 70 °C |
| Storage temperature, min. | -25 °C |
| Storage temperature, max. | 70 °C |
| illuminated | Yes |
| Luminous elements | Full illumination 2 LEDs |
| Soldering time for manual soldering, max. | 5 sec |
| Soldering temperature for manual soldering | 350 °C |
| Soldering temperature for wave soldering | 260 °C |
| Soldering | Manual / wave |

### direct links

- RAFI eCatalog

The information in this data sheet only contains general descriptions and / or performance features, which may not apply precisely as described to the respective application, and which my change due to further product enhancements. The technical data, illustrations and other information about our products are the mere results of individual technical testing. These descriptions and other product features are only binding if they expressly agreed upon at the time of the conclusion of a binding contract. In all other cases, we reserve the right to make technical changes as well as changes of availability. Pictures and other graphic illustrations are approximations only. All product names may be trademarks or brand names of the RAFI Group or any other sub-supplier of RAFI. The use of such by any third parties for their own purposes may infringe the rights of the respective entity holding those rights.


**RAFI GmbH & Co. KG**

Ravensburger Str. 128-134
88276 Berg / Ravensburg
Germany
www.rafi-group.com,
info.headquarters@rafi-group.com

| | |
|---|---|
| Solder heat resistance according to standard | DIN EN 60068-2-20 |
| Packaging | Tube |
| Packaging unit | 32 pcs. |
| net weight | 2.6 g |
| Operating life | 1,000,000 cycles |
| B10 | 1,300,000 cycles |
| MOQ order | 32 pcs. |
| RoHS compliant | Yes |
| REACH compliant | Yes |

**mounting diameters**

| | |
|---|---|
| Outside dimension, length | 15 mm |
| Outside dimension, width | 15 mm |
| Outside dimension, height | 9.7 mm |
| Installation height | 9.7 mm |
| Grid, min. | 19.05 mm |

**mechanical data**

| | |
|---|---|
| Actuation function | momentary contact function |
| Operating force, max. | 100 N |
| Operating force, min. | 2.9 ± 0.6 N |
| Switching travel | $0.5^{+0.3}$ mm |
| Contact function | 1 NO |
| Contact system | Snap-action contact |
| Contact material | Gold |
| Fixing | Soldering |
| Solderability | Yes |
| Terminal on the rear | THT |

**electrical data**

| | |
|---|---|
| Operating voltage of the luminous element, min. | 2 V |
| Operating voltage of the luminous element, max. | 5 V |
| Rated voltage, min. | 0.02 V |
| Rated voltage, max. | 35 V |
| Operating current of the luminous element, max. | 30 mA |
| Rated current, min. | 0.00001 A |
| Rated current, max. | 0.1 A |
| Rated power, max. | 2 W |
| dropping resistor | no |

The information in this data sheet only contains general descriptions and / or performance features, which may not apply precisely as described to the respective application, and which my change due to further product enhancements. The technical data, illustrations and other information about our products are the mere results of individual technical testing. These descriptions and other product features are only binding if they expressly agreed upon at the time of the conclusion of a binding contract. In all other cases, we reserve the right to make technical changes as well as changes of availability. Pictures and other graphic illustrations are approximations only. All product names may be trademarks or brand names of the RAFI Group or any other sub-supplier of RAFI. The use of such by any third parties for their own purposes may infringe the rights of the respective entity holding those rights.


**RAFI GmbH & Co. KG**

Ravensburger Str. 128-134
88276 Berg / Ravensburg
Germany
www.rafi-group.com,
info.headquarters@rafi-group.com

## drawings

### Dimensioned drawing

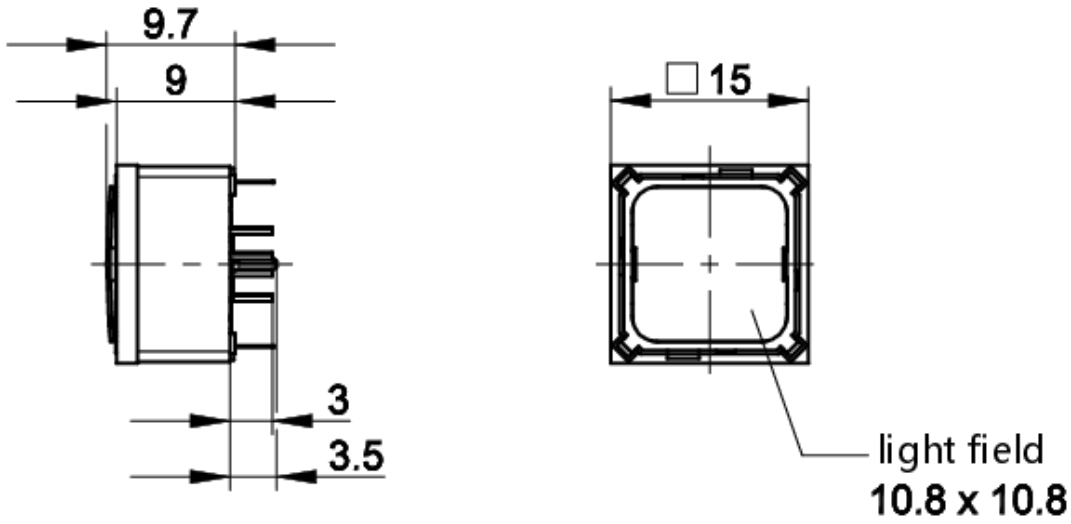


### System drawing

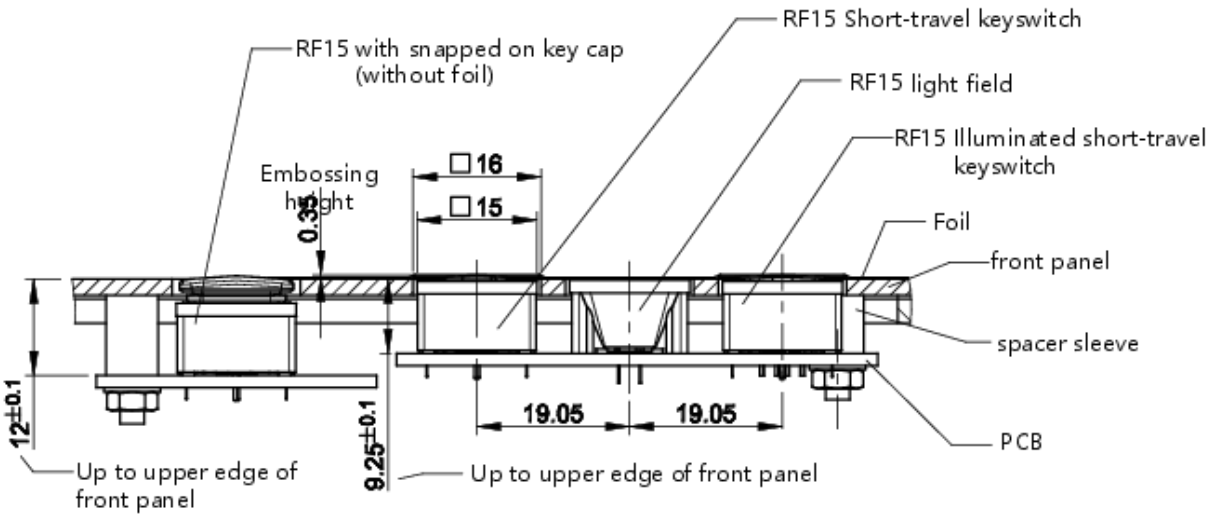


The information in this data sheet only contains general descriptions and / or performance features, which may not apply precisely as described to the respective application, and which my change due to further product enhancements. The technical data, illustrations and other information about our products are the mere results of individual technical testing. These descriptions and other product features are only binding if they expressly agreed upon at the time of the conclusion of a binding contract. In all other cases, we reserve the right to make technical changes as well as changes of availability. Pictures and other graphic illustrations are approximations only. All product names may be trademarks or brand names of the RAFI Group or any other sub-supplier of RAFI. The use of such by any third parties for their own purposes may infringe the rights of the respective entity holding those rights.


**RAFI GmbH & Co. KG**

Ravensburger Str. 128-134
88276 Berg / Ravensburg
Germany
www.rafi-group.com,
info.headquarters@rafi-group.com

## PCB drawing

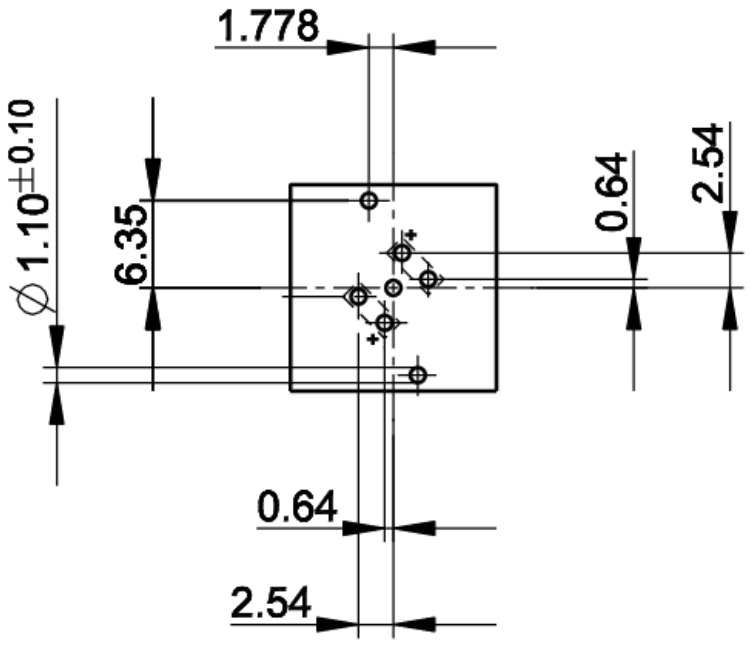


Button full illumination

## PCB drawing

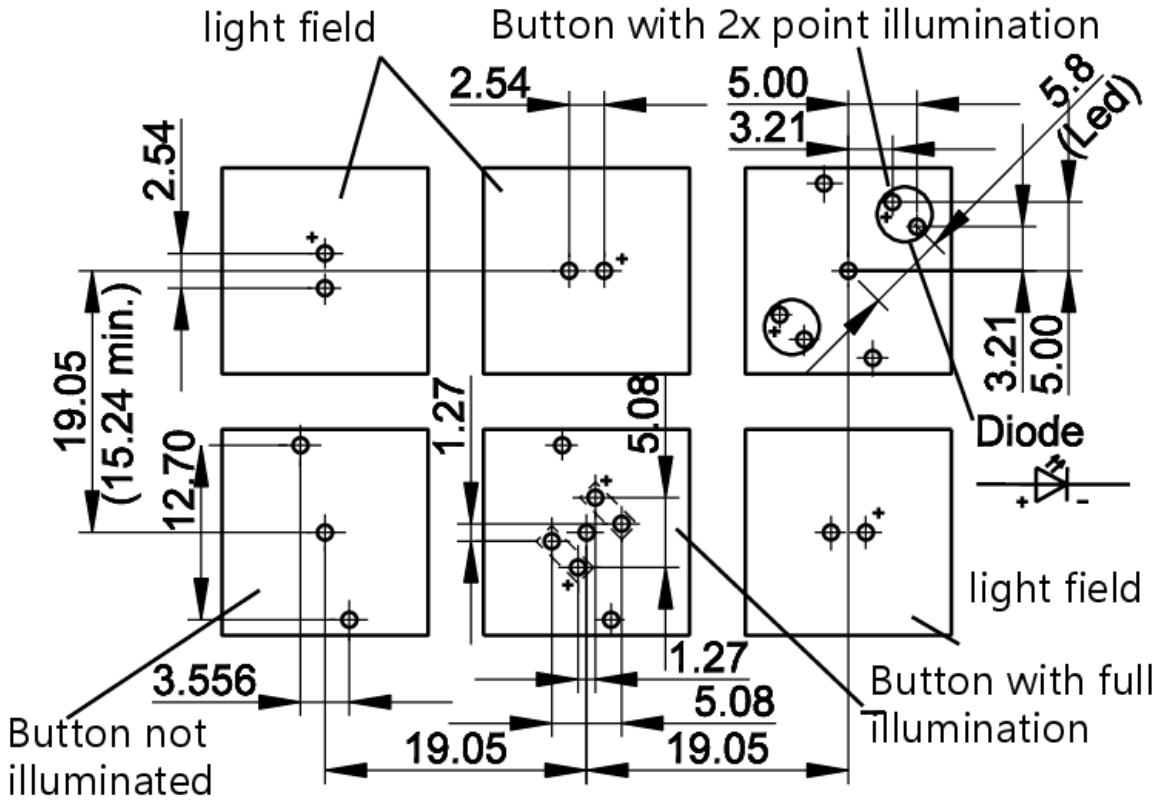


The information in this data sheet only contains general descriptions and / or performance features, which may not apply precisely as described to the respective application, and which my change due to further product enhancements. The technical data, illustrations and other information about our products are the mere results of individual technical testing. These descriptions and other product features are only binding if they expressly agreed upon at the time of the conclusion of a binding contract. In all other cases, we reserve the right to make technical changes as well as changes of availability. Pictures and other graphic illustrations are approximations only. All product names may be trademarks or brand names of the RAFI Group or any other sub-supplier of RAFI. The use of such by any third parties for their own purposes may infringe the rights of the respective entity holding those rights.


**RAFI GmbH & Co. KG**

Ravensburger Str. 128-134
88276 Berg / Ravensburg
Germany
www.rafi-group.com,
info.headquarters@rafi-group.com

## front panel drawing

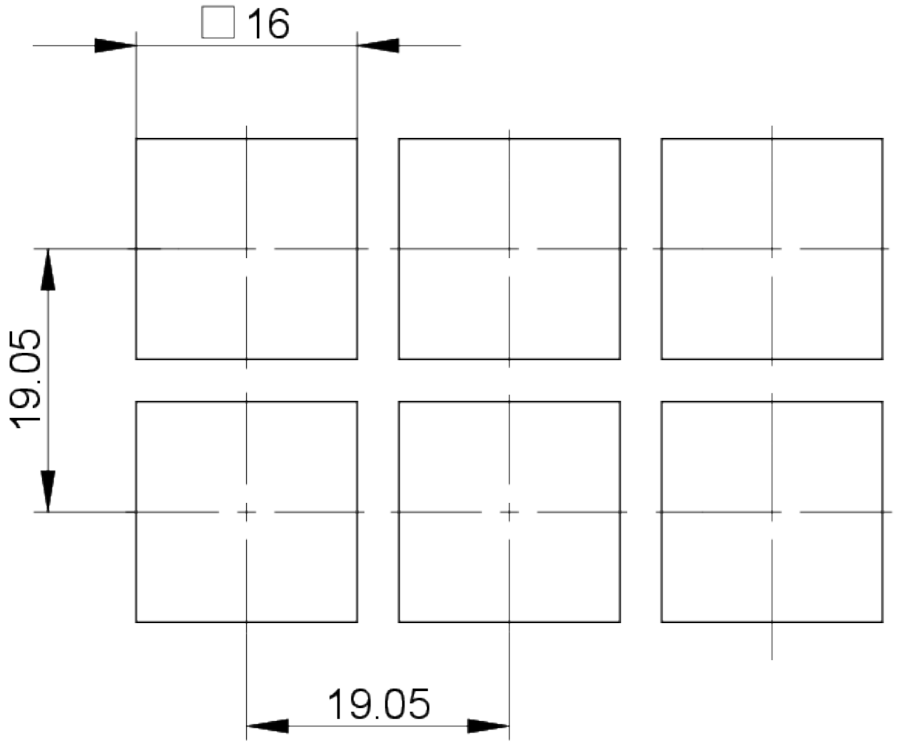


## front panel drawing

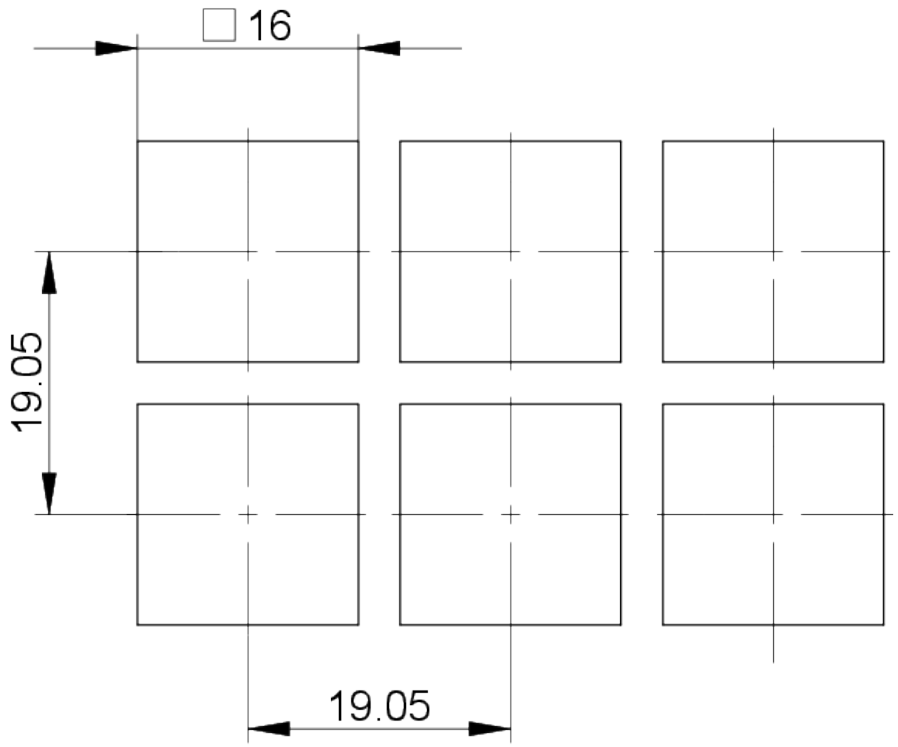


The information in this data sheet only contains general descriptions and / or performance features, which may not apply precisely as described to the respective application, and which my change due to further product enhancements. The technical data, illustrations and other information about our products are the mere results of individual technical testing. These descriptions and other product features are only binding if they expressly agreed upon at the time of the conclusion of a binding contract. In all other cases, we reserve the right to make technical changes as well as changes of availability. Pictures and other graphic illustrations are approximations only. All product names may be trademarks or brand names of the RAFI Group or any other sub-supplier of RAFI. The use of such by any third parties for their own purposes may infringe the rights of the respective entity holding those rights.


**RAFI GmbH & Co. KG**

Ravensburger Str. 128-134
88276 Berg / Ravensburg
Germany
www.rafi-group.com,
info.headquarters@rafi-group.com