HENGSTLER

TECHNICAL DATASHEET

Incremental Encoder RI 58-O / RI 58-T



Synchro flange



Clamping flange

- Universal industry standard encoder
- Up to 40 000 steps with 10 000 pulses
- High signal accuracy
- Protection class up to IP67
- Flexible due to many flange and configuration variants
- Suitable for high shock ratings
- Applications: machine tools, CNC axles, packing machines, motors/ drives, injection moulding machines, sawing machines, textile machines
- For EX version, see RX 70-I
- Operating temperature up to 100 °C (RI 58-T)

NUMBER OF PULSES RI 58-O

1 / 2 / 3 / 4 / 5 / 10 / 15 / 20 / 25 / 30 / 35 / 40 / 45 / 50 / 60 / 64 / 70 / 72 / 80 / **100** / 125 / 128 / 144 / 150 / 180 / 200 / 230 / **250** / 256 / 300 / 314 / 350 / 360 / 375 / 400 / 460 / 480 / **500** / 512 / 600 / 625 / 635 / 720 / 750 / 900 / **1000** / **1024** / 1200 / **1250** / 1500 / 1600 / 1800 / 2000 / 2048 / **2500** / 3000 / 3480 / **3600** / 3750 / 3968 / 4000 / **4096** / 4800 / **5000** / 5400 / 6000 / 7200 / 7680 / 8000 / 8192 / 9000 / 10000
Other number of pulses on request
Preferably available versions are printed in bold type.

NUMBER OF PULSES RI 58-T

4 / 5 / 10 / 15 / 20 / 25 / 30 / 35 / 40 / 45 / 50 / 60 / 64 / 70 / 72 / 80 / **100** / 125 / 128 / 144 / 150 / 180 / 200 / 230 / **250** / 256 / 300 / 314 / 350 / 360 / 375 / 400 / 460 / 480 / **500** / 512 / 600 / 625 / 635 / 720 / 750 / 900 / **1000** / **1024** / 1200 / **1250** / 1500 / 1600 / 1800 / 2000 / 2048 / **2500**
Other number of pulses on request
Preferably available versions are printed in bold type.

TECHNICAL DATA
mechanical

Housing diameter	58 mm
Shaft diameter	6 mm / 6.35 mm / 7 mm / 9.52 mm / 10 mm / 12 mm (Solid shaft)
Flange (Mounting of housing)	Synchro flange, Clamping flange, Square flange, Synchro clamping flange
Protection class shaft input (EN 60529)	IP64 or IP67
Protection class housing (EN 60529)	IP65 or IP67
Shaft load axial / radial	Ø 6 mm / 6,35 mm: 20 N / 40 N Ø 7 ... 10 mm: 40 N / 60 N Ø 12 mm: 60 N / 80 N
Max. speed	max. 10 000 rpm
Starting torque typ.	≤ 0.5 Ncm ≤ 1 Ncm (IP67)

TECHNICAL DATASHEET

Incremental Encoder RI 58-O / RI 58-T

TECHNICAL DATA
mechanical (continued)

Moment of inertia	approx. 14 gcm² (Synchro flange) approx. 20 gcm² (Clamping flange)
Vibration resistance (DIN EN 60068-2-6)	100 m/s² (10 ... 2000 Hz)
Shock resistance (DIN EN 60068-2-27)	1000 m/s² (6 ms)
Operating temperature	RI 58-O: -10 °C ... +70 °C RI 58-T: -25 °C ... +100 °C
Storage temperature	RI 58-O: -25 °C ... +85 °C RI 58-T: -25 °C ... +100 °C
Material housing	Aluminum
Weight	approx. 360 g
Connection	PVC cable, axial or radial M23 connector (Conin), axial or radial TPE cable, axial or radial M16 (Binder), axial or radial MS, axial oder radial

TECHNICAL DATA
electrical

General design	as per DIN VDE 0160, protection class III, contamination level 2, overvoltage class II
Supply voltage [1]	RS422 + Sense (T): DC 5 V ±10 % RS422 + Alarm (R): ± 10% DC 5 V or DC 10 - 30 V Push-pull (K), Push-pull antivalent (I): DC 10-30 V
Current w/o load typ.	40 mA (DC 5 V), 60 mA (DC 10 V), 30 mA (DC 24 V)
Max. pulse frequency	RS422: 300 kHz Push-pull: 200 kHz
Standard output versions	RS422 + Alarm (R): A, B, N, $\overline{A}$, $\overline{B}$, $\overline{N}$, $\overline{Alarm}$ RS422 + Sense (T): A, B, N, $\overline{A}$, $\overline{B}$, $\overline{N}$, Sense Push-pull (K): A, B, N, $\overline{Alarm}$ Push-pull complementary (I): A, B, N, $\overline{A}$, $\overline{B}$, $\overline{N}$, $\overline{Alarm}$
Pulse width error	± max. 25° electrical
Number of pulses	1 ... 10 000
Alarm output	NPN-O.C., max. 5 mA
Pulse shape	Square wave
Pulse duty factor	1:1

[1] Pole protection with supply voltage DC 10 - 30 V

ELECTRICAL CONNECTIONS
Cable PVC

Cable PVC (A, B) Colour	**Output RS422 (R, T)**	**push-pull (K)**	**push-pull complementary (I)**
red	DC 5 / 10 - 30 V	DC 10 - 30 V	DC 10 - 30 V
yellow/red	Sense V_{CC}		Sense V_{CC}
white	Channel A	Channel A	Channel A
white/brown	Channel $\overline{A}$		Channel $\overline{A}$
green	Channel B	Channel B	Channel B
green/brown	Channel $\overline{B}$		Channel $\overline{B}$
yellow	Channel N	Channel N	Channel N
yellow/brown	Channel $\overline{N}$		Channel $\overline{N}$
black	GND	GND	GND
yellow/black	$\overline{Alarm}$/Sense GND [1]	$\overline{Alarm}$	$\overline{Alarm}$
screen [2]	screen [2]	screen [2]	screen [2]

[1] depending on ordering code

[2] connected with encoder housing

TECHNICAL DATASHEET

Incremental Encoder RI 58-O / RI 58-T

ELECTRICAL CONNECTIONS
Cable TPE

Cable TPE (E, F) Colour	Output RS422 (R, T)	push-pull (K)	push-pull complementary (I)
brown/green	DC 5 / 10 - 30 V	DC 10 - 30 V	DC 10 - 30 V
blue	Sense V_{CC}		Sense V_{CC}
brown	Channel A	Channel A	Channel A
green	Channel $\overline{A}$		Channel $\overline{A}$
grey	Channel B	Channel B	Channel B
pink	Channel $\overline{B}$		Channel $\overline{B}$
red	Channel N	Channel N	Channel N
black	Channe $\overline{N}$		Channe $\overline{N}$
white/green	GND	GND	GND
violet (white) [1]	$\overline{Alarm}$/Sense GND [2]	$\overline{Alarm}$	$\overline{Alarm}$
screen [3]	screen [3]	screen [3]	screen [3]

[1] white with RS422 + Sense (T)
[2] depending on ordering code
[3] connected with encoder housing

ELECTRICAL CONNECTIONS
M23 connector (Conin), 12 pole

Pin	RS422 + Sense (T)	RS422 + Alarm (R)	push-pull (K)	push-pull complementary (I)
1	Channel $\overline{B}$	Channel $\overline{B}$	N.C.	Channel $\overline{B}$
2	Sense V_{CC}	Sense V_{CC}	N.C.	Sense V_{CC}
3	Channel N	Channel N	Channel N	Channel N
4	Channel $\overline{N}$	Channel $\overline{N}$	N.C.	Channel $\overline{N}$
5	Channel A	Channel A	Channel A	Channel A
6	Channel $\overline{A}$	Channel $\overline{A}$	N.C.	Channel $\overline{A}$
7	N.C.	$\overline{Alarm}$	$\overline{Alarm}$	$\overline{Alarm}$
8	Channel B	Channel B	Channel B	Channel B
9	N.C. [1]	N.C. [1]	N.C. [1]	N.C. [1]
10	GND	GND	GND	GND
11	Sense GND	N.C.	N.C.	N.C.
12	DC 5 V	DC 10 - 30 V	DC 10 - 30 V	DC 10 - 30 V

[1] screen for cable with CONIN connector

ELECTRICAL CONNECTIONS
MS connector, 10 pole

Pin	Description RS422 / Euro-pinout (Connection codes O and K)	push-pull	push-pull complementary
1/A	Channel A	Channel A	Channel A
2/B	Channel B	Channel B	Channel B
3/C	Channel N	Channel N	Channel N
4/D	DC 5/10 - 30 V	DC 10 - 30 V	DC 10 - 30 V
5/E	$\overline{Alarm}$	$\overline{Alarm}$	$\overline{Alarm}$
6/F	GND	GND	GND
7/G	Channel $\overline{A}$	screen	Channel $\overline{A}$
8/H	Channel $\overline{B}$	N.C.	Channel $\overline{B}$
9/I	Channel $\overline{N}$	N.C.	Channel $\overline{N}$
10/J	screen	screen	screen

TECHNICAL DATASHEET

Incremental Encoder RI 58-O / RI 58-T

ELECTRICAL CONNECTIONS
M16 connector (Binder), 6 pole

Description (push-pull)	Pin
DC 10 - 30 V	1
Channel A	2
Channel N	3
Channel B	4
$\overline{\text{Alarm}}$	5
GND	6

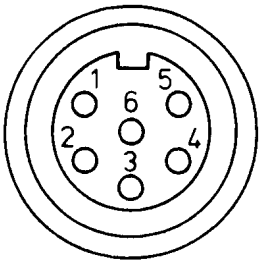

DIMENSIONED DRAWINGS

Synchro flange, 58 mm

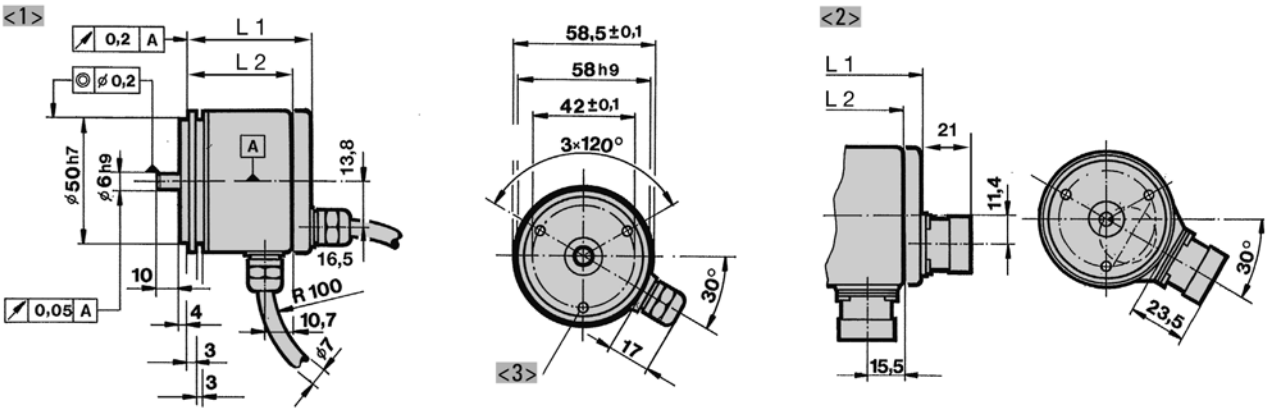

<1> Connection cable, axial/radial
<2> M23, 12 pole, axial/ radial
<3> mounting thread M4x5

Cable bending radius R for flexible installation ≥ 100 mm
Cable bending radius R for fixed installation ≥ 40 mm
Dimensions in mm

Clamping flange, 58 mm

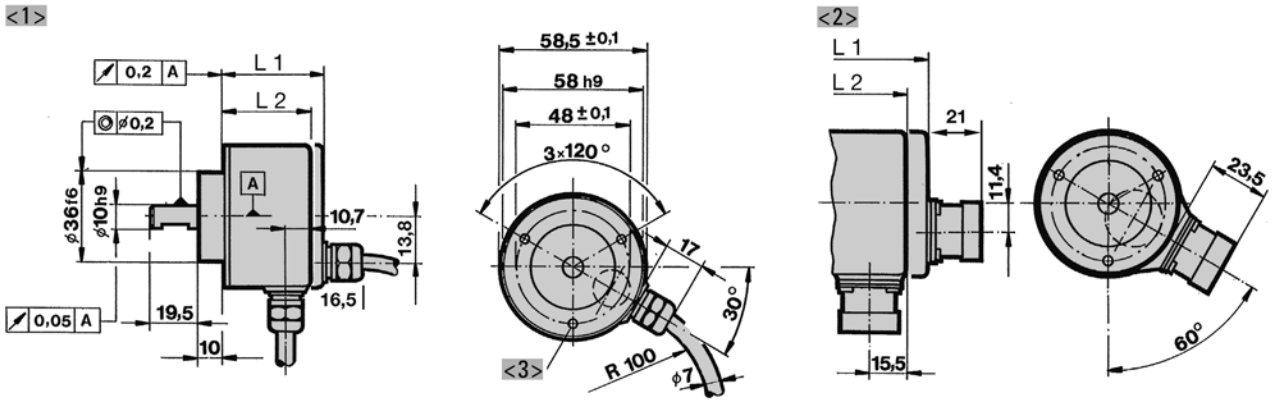

<1> Connection cable, axial/radial
<2> M23, 12 pole, axial/ radial
<3> mounting thread M3x5 (Option M4x5)

Cable bending radius R for flexible installation ≥ 100 mm
Cable bending radius R for fixed installation ≥ 40 mm
Dimensions in mm

DIMENSIONED DRAWINGS (continued)

Square flange, 63.5 mm x 63.5 mm (2.5" x 2.5')

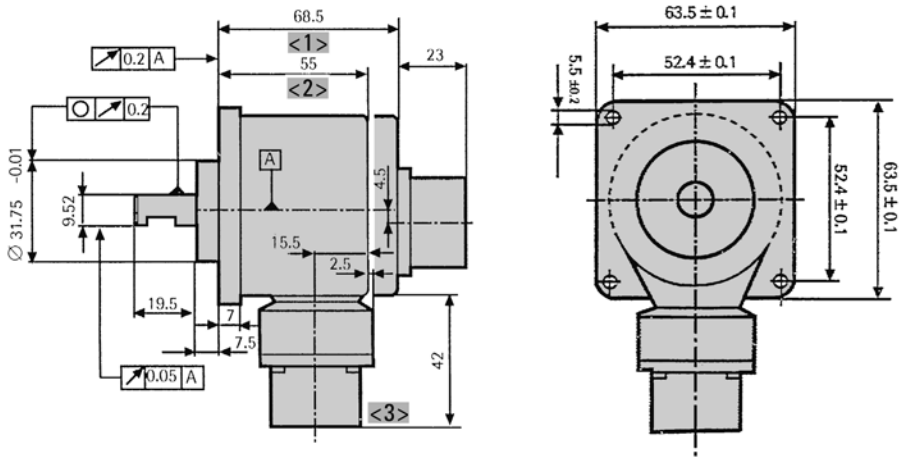

<1> axial
<2> radial
<3> MS 6 - 10 pole

Dimensions in mm

Square flange 80 x 80 mm

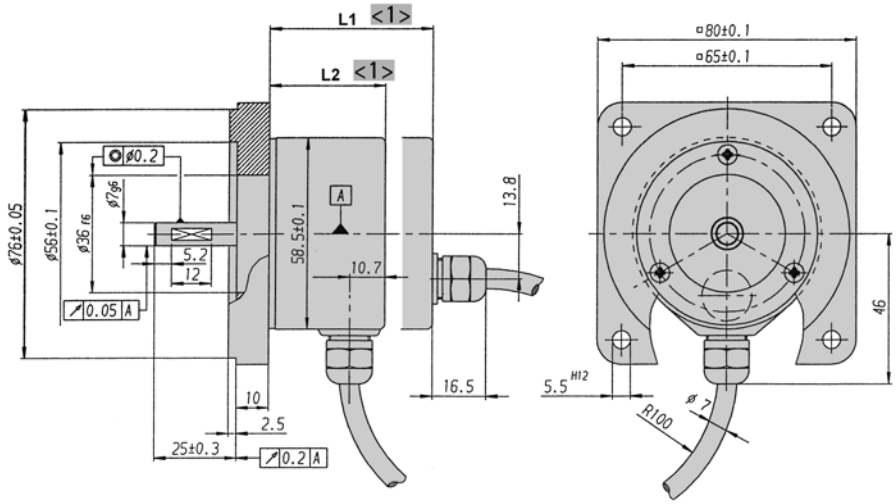

<1> L1, L2 see clamping flange
Cable bending radius R for flexible installation ≥ 100 mm

Cable bending radius R for fixed installation ≥ 40 mm

Dimensions in mm

DIMENSIONS

Typ	Connection	Output	axial L1 mm	radial L2 mm
Synchro flange, 58 mm	cable	R (with U_B = DC 5 V), T, K, I	51.5	41.5
		R (with U_B = DC 10 - 30 V)	56	56
	connector	R (with U_B = DC 5 V), T, K, I	57.5	51.5
		R (with U_B = DC 10 - 30 V)	57.5	56
Clamping flange, 58 mm	cable	R (with U_B = DC 5 V), T, K, I	45.5	35.5
		R (with U_B = DC 10 - 30 V)	50	50
	connector	R (with U_B = DC 5 V), T, K, I	51.5	45.5
		R (with U_B = DC 10 - 30 V)	51.5	50

© Hengstler GmbH, Uhlandstr. 49, D-78554 Aldingen/ Germany
☎ +49 74 24 - 89 0 Fax +49 74 24 - 89 500
E-mail: info@hengstler.com Internet: www.hengstler.com

TECHNICAL DATASHEET

Incremental Encoder RI 58-O / RI 58-T

STANDARD VERSIONS

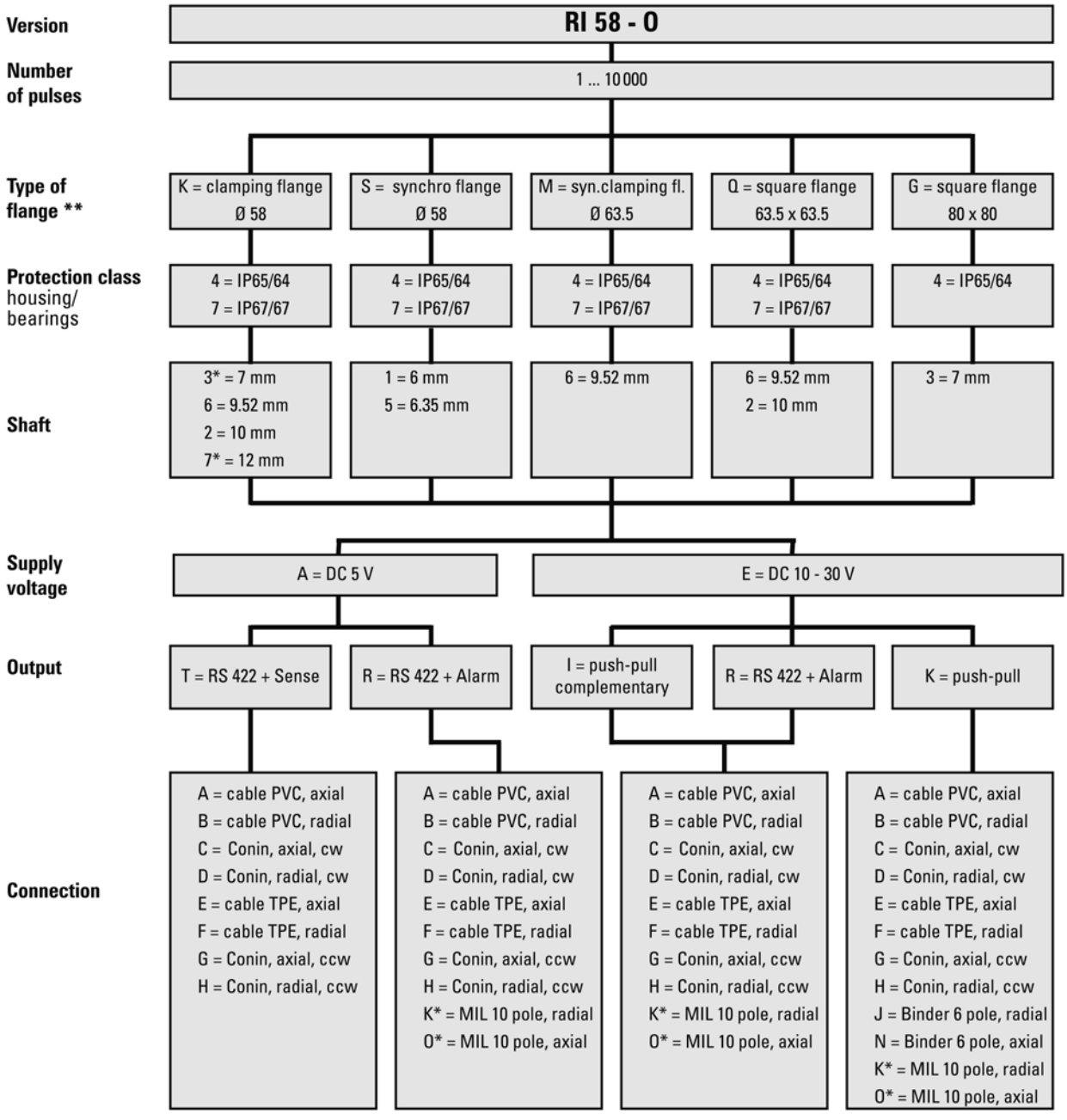

* not for IP67

** other flange versions can be realized by combination of clamping flange + flange adapter (see Accessories)
e.g. RI58 with synchro flange and 10 mm-shaft: version clamping flange with 10 mm-shaft + synchro flange adapter (1 522 328)

TECHNICAL DATASHEET

Incremental Encoder RI 58-O / RI 58-T

STANDARD VERSIONS (100 °C max. operating temperature)

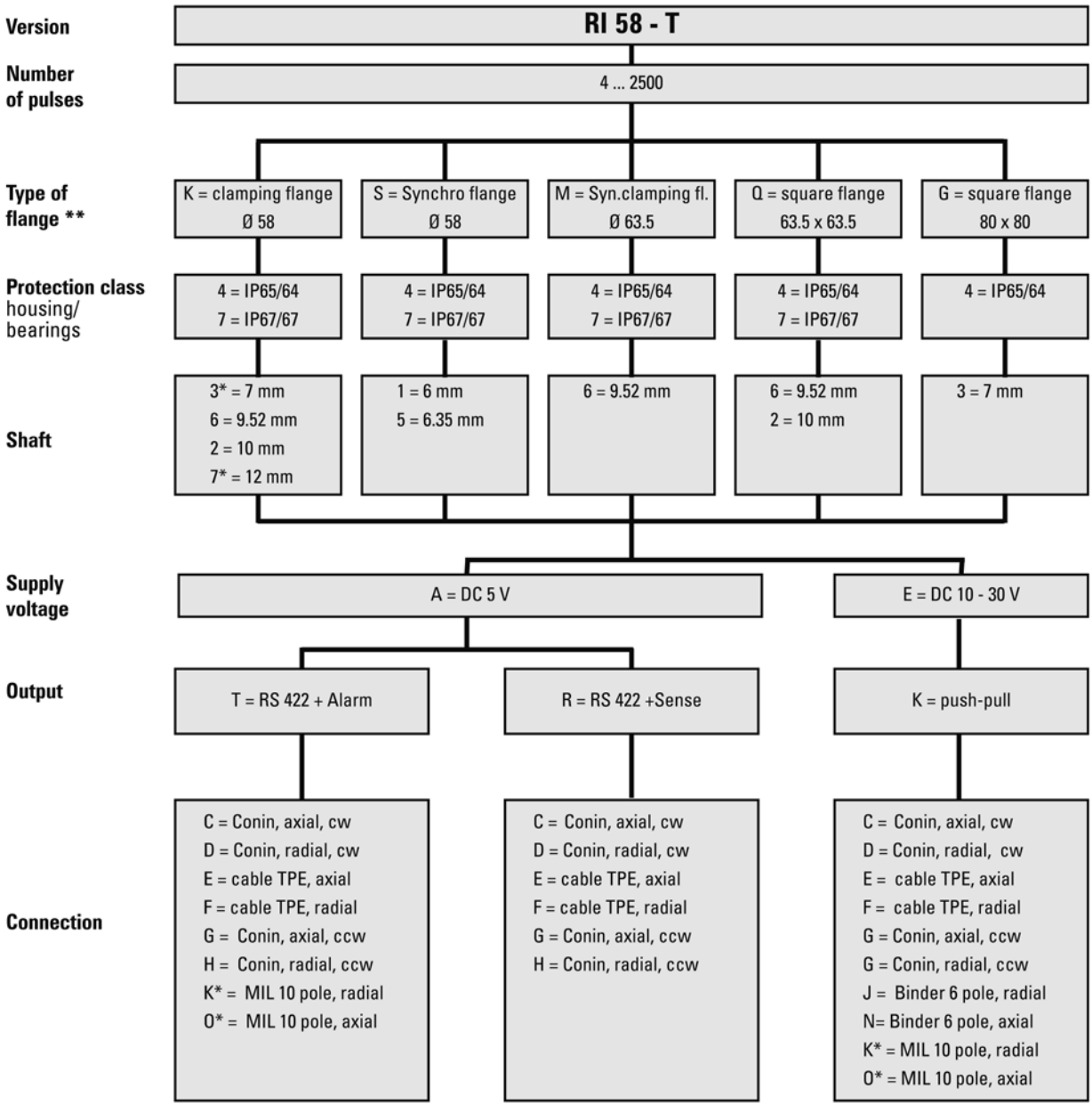

* not for IP67

** other flange versions can be realized by combination of clamping flange + flange adapter (see Accessories)
e.g. RI58 with synchro flange and 10 mm-shaft: version clamping flange with 10 mm-shaft + synchro flange adapter (1 522 328)

Further versions on request

TECHNICAL DATASHEET

Incremental Encoder RI 58-O / RI 58-T

ORDERING INFORMATION

Type	Number of pulses	Supply voltage [1]	Flange, Protection, Shaft [2,3]	Output [4]	Connection [5,6]
RI58-O **RI58-T**	RI 58-O: **1 ... 10000** RI 58-T: **4 ... 2500**	**A** DC 5 V **E** DC 10 - 30 V	**S.41** Synchro, IP65 [7], 6 mm **S.45** Synchro, IP65 [7], 6.35 mm [7] **S.71** Synchro, IP67, 6 mm **S.75** Synchro, IP67, 6.35 mm **K.42** Clamping, IP65 [7], 10 mm **K.47** Clamping, IP65 [7], 12 mm **K.43** Clamping, IP65 [7], 7 mm **K.46** Clamping, IP65 [7], 9.52 mm **K.72** Clamping, IP67, 10 mm **K.76** Clamping, IP67, 9.52 mm **M.46** Syn.clamping, IP65 [7] ,9.52 mm **M.76** Syn.clamping, IP67, 9.52 **Q.46** Square, IP65 [7], 9.52 mm **Q.42** Square, IP65 [7], 10 mm **Q.76** Square, IP67, 9.52 mm **Q.72** Square, IP67, 10 mm **G.43** Square 80x80, IP65 [7], 7 mm	**R** RS422 +Alarm **T** RS422 +Sense **K** Push-pull **I** Push-pull complementary	**A** PVC cable, axial **B** PVC cable, radial **E** TPE cable, axial **F** TPE cable, radial **C** M23 connector (Conin), 12 pole, axial, cw **D** M23 connector (Conin), 12 pole, radial, cw **G** M23 connector (Conin), 12 pole, axial, ccw **H** M23 connector (Conin), 12 pole, radial, ccw **J** M16 connector (Binder), 6 pole, radial **N** M16 connector (Binder), 6 pole, axial **O** MS connector, 10 pole (Insert arrangement 18-1), axial **K** MS connector, 10 pole (Insert arrangement 18-1), radial

[1] DC 10 - 30 V available with output K, I, R/ DC 5 V availalble with output R, T

[2] other flange versions can be realized by combination of clamping flange + flange adapter (see Accessories), e.g. RI58 with synchro flange and 10 mm-shaft: version clamping flange with 10 mm-shaft + synchro flange adapter (1 522 328)

[3] Output code "K" and "I": short-circuit-proof

[4] Connection code "O", "K": according to MIL-C-5015 (only RI 58-O)

[5] IP67 on cover with connector only if IP67 mating connector mounted properly.

[6] Connection code "O", "K": according to MIL-C-5016 (only RI 58-T)

[7] Protection class shaft input (EN 60529) IP64

ORDERING INFORMATION
Selection of cable length

Versions with cable outlet (connection A, B, E or F) are available with various lengths of cable. To order your desired cable length, please add the respective code to the end of your ordering code. For variants with connector on cable end please add cable length code in between. Further cable lengths on request.

Code	Cable length
without code	1.5 m
-D0	3 m
-F0	5 m
-K0	10 m
-P0	15 m
-U0	20 m
-V0	25 m

Example:
Cable 3 m length: ... B - D0
Cable mit 3 m length and M23 connectorr, cw: ... B - D0 - I

TECHNICAL DATASHEET

Incremental Encoder RI 58-O / RI 58-T
Accessories

FLEXIBLE COUPLINGS


Bellows coupling


Disk coupling


Helical coupling


Isolated disk coupling


Plastic coupling

		Ordering code
Bellows coupling	12 mm / 12 mm	0 070 666
Bellows coupling	10 mm / 10 mm	3 520 037
Bellows coupling	9.53 mm / 9.53 mm	3 520 038
Bellows coupling	6 mm / 6 mm	3 520 068
Bellows coupling	8 mm / 10 mm	3 520 077
Disk coupling	6 mm / 6 mm	0 070 663
Helical coupling 19/28	5 mm / 5 mm	3 520 036
Helical coupling 19/28	5 mm / 6 mm	3 520 035
Helical coupling 19/28	6 mm / 6 mm	0 070 653
Helical coupling 19/28	6.35 mm / 6.35 mm	3 520 057
Helical coupling 25/32	6 mm / 9.53 mm	3 520 052
Helical coupling 25/32	6 mm / 10 mm	3 520 066
Helical coupling 25/32	6.35 mm / 9.52 mm	3 520 062
Helical coupling 25/32	10 mm / 12 mm	3 520 065
Helical coupling 25/32	10 mm / 10 mm	3 520 074
Isolated disk coupling	6 mm / 6 mm	3 520 081
Isolated disk coupling	6 mm / 10 mm	3 520 082
Isolated disk coupling	6 mm / 9.53 mm	3 520 084
Isolated disk coupling	6.35 mm / 6.35 mm	3 520 085
Isolated disk coupling	7 mm / 7 mm	3 520 086
Isolated disk coupling	10 mm / 10 mm	3 520 088
Plastic coupling	5 mm / 6 mm	3 520 033
Plastic coupling	6 mm / 6 mm	1 761 026
Plastic coupling	5 mm / 5 mm	3 520 034

MOUNTING

	Ordering code
Clamping eccentric for synchro flange, d6,5 for M3 (set of three)	0 070 655
Clamping eccentric for synchro flange, d9 for M3 (set of three)	0 070 657
Fastening angle (plastic), for clamping flange RI 58, AC 58 (fastening material included)	1 522 329
Mounting bell (plastic), for synchro flange RI 58, AC 58 (clamping eccentric and fastening material included)	1 522 330
Square flange adapter 58 x 58 mm, for clamping flange RI 58, AC 58 (fastening material included)	1 522 326
Square flange adapter 80 x 80 mm, for clamping flange RI 58, AC 58 (fastening material included)	1 522 327
Synchro flange adapter , for clamping flange RI 58, AC 58 (fastening material included)	1 522 328

TECHNICAL DATASHEET

Incremental Encoder RI 58-O / RI 58-T
Accessories

CONNECTORS

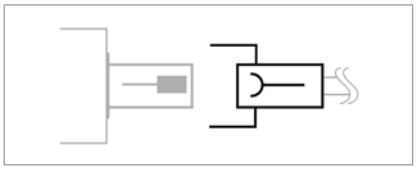

Connector (socket) matching with encoder connector	Ordering code
M16 (Binder), 6 pole, bent, IP40, mating connector for connection J/N	3 539 209
M16 (Binder), 6 pole, gerade, IP67, mating connector for connection J/N	3 539 472
M23 (Conin), 12 pole, PG9, cw, mating connector for connection C/D/-I	3 539 202
MS, 10 pole, mating connector for connection K/O/R/T	3 539 258
MS, 7 pole, mating connector for connection L/P	3 539 262
PT, 8 pole, mating connector for connection 1/2	3 539 333

CONNECTORS

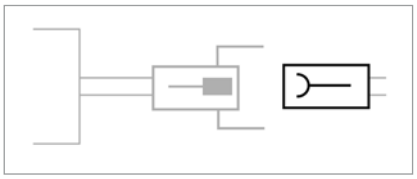

Coupling (socket) matching with encoder cable with connector	Ordering code
M23 (Conin), 12 pole, cw, mating connector for connection -C (cable plug 3 539 186)	3 539 187
M23 (VDW), 12 pole, cw, mating connector for connection -B (cable plug 3 539 252)	3 539 304

CONNECTORS

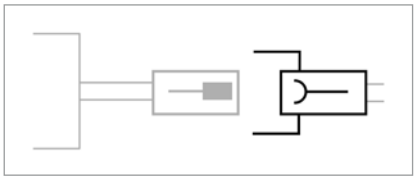

Connector (socket) matching with encoder cable with connector	Ordering code
M23 (Conin), 12 pole, ccw, mating connector for connection G/H/-D/-H	3 539 229
M23 (VDW), 12 pole, ccw, mating connector for connection -E (cable plug 3 539 274)	3 539 305

CONNECTING CABLES

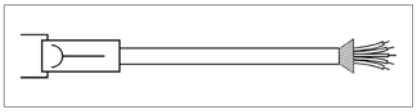

Connecting cables with plug (socket) on one end	Ordering code
M16 (Binder), 6 pole, PVC cable, mating connector for connection J/N, 3 m	1 522 405
M16 (Binder), 6 pole, PVC cable, mating connector for connection J/N, 5 m	1 522 404
M16 (Binder), 6 pole, PVC cable, mating connector for connection J/N, 10 m	1 522 340
M16 (Binder), 6 pole, PVC cable, mating connector for connection J/N, 15 m	1 522 833
M16 (Binder), 6 pole, PVC cable, mating connector for connection J/N, 50 m	1 522 836
M23 (Conin), 12 pole, TPE cable, cw, mating connector for connection C/D/-I, 3 m	1 522 348
M23 (Conin), 12 pole, TPE cable, cw, mating connector for connection C/D/-I, 5 m	1 522 349
M23 (Conin), 12 pole, TPE cable, cw, mating connector for connection C/D/-I, 10 m	1 522 350
M23 (Conin), 12 pole, TPE cable, cw, mating connector for connection C/D/-I, 15 m	1 522 454
M23 (Conin), 12 pole, TPE cable, cw, mating connector for connection C/D/-I, 20 m	1 522 456
M23 (Conin), 12 pole, TPE cable, cw, mating connector for connection C/D/-I, 25 m	1 522 457

TECHNICAL DATASHEET

Incremental Encoder RI 58-O / RI 58-T
Accessories

CONNECTING CABLES (continued)

Connecting cables with plug (socket) on one end	Ordering code
M23 (Conin), 12 pole, TPE cable, cw, mating connector for connection C/D/-I, 30 m	1 522 464
M23 (Conin), 12 pole, TPE cable, cw, mating connector for connection C/D/-I, 40 m	1 522 643
M23 (Conin), 12 pole, TPE cable, cw, mating connector for connection C/D/-I, 50 m	1 522 793
M23 (Conin), 12 pole, TPE cable, ccw, mating connector for connection G/H/-D/-H, 3 m	1 522 394
M23 (Conin), 12 pole, TPE cable, ccw, mating connector for connection G/H/-D/-H, 5 m	1 522 395
M23 (Conin), 12 pole, TPE cable, ccw, mating connector for connection G/H/-D/-H, 10 m	1 522 396
M23 (Conin), 12 pole, TPE cable, ccw, mating connector for connection G/H/-D/-H, 15 m	1 522 447
M23 (Conin), 12 pole, TPE cable, ccw, mating connector for connection G/H/-D/-H, 20 m	1 522 461
M23 (Conin), 12 pole, TPE cable, ccw, mating connector for connection G/H/-D/-H, 25 m	1 522 462
M23 (Conin), 12 pole, TPE cable, ccw, mating connector for connection G/H/-D/-H, 30 m	1 522 463
M23 (Conin), 12 pole, TPE cable, ccw, mating connector for connection G/H/-D/-H, 40 m	1 522 463
MS, 10 pole, TPE cable, mating connector for connection O/K, 3 m	1 522 610
MS, 10 pole, TPE cable, mating connector for connection O/K, 5 m	1 522 754

CONNECTING CABLES

Cable not made up with connectors	Ordering code
PVC cable, 10-core + screen	3 280 114 + length
PVC cable, 6-core + screen	3 280 113 + length
TPE cable, 12-core + screen	3 280 112 + length

TECHNICAL DATASHEET

Incremental Encoder RI 58-O / RI 58-T
Accessories

MEASURING WHEELS

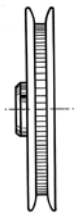
Tread 1

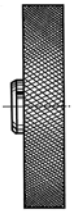
Tread 2 + 3


Tread 4


Tread 5


Tread 6

Tread 1
with rim and fine crosshatched knurl
Applications such as threads and yarns

Tread 2 A
with glued-on rubber profile A = soft specially clinging rubber surface (red)
Applications such as paper and cardboard, measuring cables, nongreasy metals, fleece, undressed or surface-treated wood, soft and hard plastics

Tread 2 B
with glued-on rubber profile B = low-wear rubber surface with good grip (white)
Applications such as paper and cardboard, measuring cables, nongreasy metals, fleece, undressed or surface-treated wood, soft and hard plastics

Tread 3
vulcanized rubber surface with parallel knurl
Applications such as rubber, leather, fabrics, flooring and glass

Tread 4
Aluminum with parallel knurl
Applications such as rubber, soft plastics, wood with rough surface, and to a limited extent for fabrics

Tread 5
with rim, aluminum with parallel knurl
Applications such as threads, yarns and bands

Tread 6
plastic surface
Applications such as wire, greasy metals and steel sections

Material	Bore diameter (mm) fitting to encoder shaft	Circum-ference	Tread	Width of bearing surface	**Ordering code**
Aluminum	7 mm	1 ft	2 A	25 mm	0 601 071
Aluminum	7 mm	1 ft	2 B	25 mm	0 601 171
Aluminum	6 mm	0.2 m	1	4 mm	0 601 015
Aluminum	7 mm	0.2 m	1	4 mm	0 601 017
Aluminum	7 mm	0.2 m	2 A	24 mm	0 601 092
Aluminum	6 mm	0.2 m	2 B	12 mm	0 601 048
Aluminum	7 mm	0.2 m	2 B	24 mm	0 601 192
Aluminum	10 mm	0.2 m	2 B	12 mm	0 601 049
Aluminum	7 mm	0.2 m	4	20 mm	0 601 093
Aluminum	7 mm	0.2 m	5	16.5 mm	0 601 094
Aluminum	7 mm	0.5 m	2 A	25 mm	0 601 050
Aluminum	7 mm	0.5 m	2 B	25 mm	0 601 150
Aluminum	7 mm	0.5 m	2 B	25 mm	0 601 204
Aluminum	10 mm	0.5 m	2 B	25 mm	0 601 151
Aluminum	7 mm	0.5 m	3	25 mm	0 601 059
Aluminum	10 mm	0.5 m	3	25 mm	0 601 156

TECHNICAL DATASHEET

Incremental Encoder RI 58-O / RI 58-T
Accessories

MEASURING WHEELS (continued)

Material	Bore diameter (mm) fitting to encoder shaft	Circum-ference	Tread	Width of bearing surface	**Ordering code**
Aluminum	12 mm	0.5 m	3	25 mm	0 601 159
Aluminum	7 mm	0.5 m	4	25 mm	0 601 121 [1]
Aluminum	7 mm	0.5 m	6	25 mm	0 601 063 [1]
Aluminum	10 mm	0.5 m	6	25 mm	0 601 163
Aluminum	12 mm	0.5 m	6	25 mm	0 601 165
Aluminum	7 mm	0.2 yd	1	4 mm	0 601 037
Aluminum	7 mm	0.5 yd	4	25 mm	0 601 061
Aluminum	10 mm	0.5 yd	4	25 mm	0 601 157
Plastic	7 mm	0.5 m	4	25 mm	0 601 301
Plastic	7 mm	0.5 m	6	25 mm	0 601 300

[1] PTB approved