COOPER Bussmann®

# Compact Circuit Protector (CCP)

UL Class CC, Midget and IEC 10x38 fuses



RoHS 2002/95/EC

The revolutionary Cooper Bussmann® CCP is 1/3 the footprint of a molded case circuit breaker. The level of protection provided by the CCP is up to three times the Short-Circuit Current Rating (SCCR) at full voltage than a molded case circuit breaker while providing disconnecting means.

## Product Features and Benefits

- Extremely compact design at 17.5mm wide per pole
- High Short-Circuit Current Ratings up to 200kA (UL) and 120kA (IEC)
- Disconnect rated to provide means for load isolation
- Full voltage rated up to 600Vac or 80Vdc
- Class CC version is UL 98 Listed, horsepower rated and suitable for branch circuit disconnect and branch circuit protection
- IEC 10x38 version complies with IEC 60947-3
- Suitable for global installations, the units comply with UL, cULus, and IEC standards accepting UL Class CC, Midget or IEC aM and gG/gL fuses
- Open Fuse Indication
  - Local fuse indication lights* are standard
  - Optional wired remote open fuse indication can be utilized to signal a PLC and open a contactor to de-energize all phases, if required
  - Cooper InVision™ wireless indication is also available (not available in Europe)
- IP20 finger-safe with 10 AWG (6mm²) or larger wire
- Built-in switch interlock capability prohibits removing the fuse under load
- Padlockable handle for lockout/tagout procedures
- Available in 1-, 2- and 3-pole versions

*Circuit must be closed for indication light to illuminate

## Specifications:

- Box Lug and Spade Terminal suitable for line, load or accessory connection
- Box Lug Connection:
  - 18-6 AWG (1 to 16mm²) single or dual rated, solid or stranded – 75°C or higher - Cu only
  - 4 AWG (25mm²) single – 75°C or higher - Cu only
- Spade Terminal Connection:
  - Max. 30A suitable for use with #8-32 UNC (M4) screw
- Torque:
  - 18-10 AWG 20 Lb-In (1-6mm²/3.4N•m)
  - 8-4 AWG 35 Lb-In (10-25mm²/5.8N•m)
- Lockout/tagout: 4mm shank lock or standard pin-out devices
- 35mm DIN rail mount
- Dimensionally compliant to DIN 43880
- Local indication minimum operating voltage:
  – 90Vac for AC version
  – 12Vdc for DC version

## Agency Information:

**UL Class CC fuse version**

- UL 98 Listed, File E302370, Guide WHTY
- cULus to CSA Standard 22.2 No. 4-04, File 302370, Guide WHTY7
- CE Compliant

**UL Midget fuse version**

- UL 508 Listed
- cULus Certified 22.2 No. 14-05
- CE Compliant

**10X38 IEC Class aM and gG/gL fuse version**

- IEC 60947-3 AC23A
- IEC 60947-3 DC23A
- CE Compliant

**Shipping Weight:**

- 2.84 lbs (1.29kg) per carton

**Carton Quantity:**

- 12 poles

**Environmental Data**

- Storage and operating temperature: -20°C to 75°C**
- Flammability rating: UL 94V0

** For fuse performance under or above 25°C, consult fuse performance derating charts in the Cooper Bussmann publication titled Selecting Protective Devices (SPD) reorder #3002.

# Compact Circuit Protector (CCP)

## UL Class CC, Midget and IEC 10x38 fuses

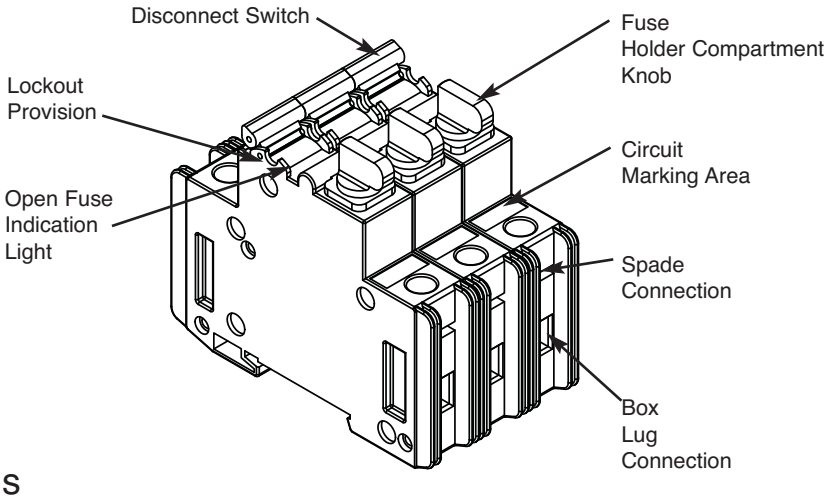


## Technical Ratings

| Catalog Number | Poles | Amp Rating | Voltage Rating | Fuse Type | Max. Fuse Amp Rating | SCCR | Agency Approvals | Hp ratings |
|---|---|---|---|---|---|---|---|---|
| CCP-1-30CC | 1 | 30 | 600Vac | Class CC | 30A | 200kA | UL 98 Listed<br>cULus 22.2 No. 4-04 | 0.5Hp@120V |
| CCP-2-30CC | 2 | 30 | 600Vac | Class CC | 30A | 200kA | UL 98 Listed<br>cULus 22.2 No. 4-04 | 2.0Hp@240V |
| CCP-3-30CC | 3 | 30 | 600Vac | Class CC | 30A | 200kA | UL98 Listed<br>cULus 22.2 No. 4-04 | 3Hp@240V<br>5Hp@480V<br>7.5Hp@600V |
| CCP-1-30M | 1 | 30 | 240Vac* UL | UL Midget | 30A | 10kA* | UL 508 Listed<br>cULus 22.2 No. 14-05 | — |
| | | | 400Vac* IEC | 10x38 IEC | 32A aM, 25A gG | 120kA* | IEC 60947-3 AC23A | |
| CCP-2-30M | 2 | 30 | 240Vac* UL | UL Midget | 30A | 10kA* | UL 508 Listed<br>cULus 22.2 No. 14-05 | — |
| | | | 400Vac* IEC | 10x38 IEC | 32A aM, 25A gG | 120kA* | IEC 60947-3 AC23A | |
| CCP-3-30M | 3 | 30 | 240Vac* UL | UL Midget | 30A | 10kA* | UL 508 Listed<br>cULus 22.2 No. 14-05 | — |
| | | | 400Vac* IEC | 10x38 IEC | 32A aM, 25A gG | 120kA* | IEC 60947-3 AC23A | |
| CCP-1-DCC | 1 | 30 | 80Vdc* | Class CC<br>(DC rated) | 30A | 20kA* | UL 98 Listed<br>CSA 22.2 No. 4-04 | — |
| CCP-1-DCM | 1 | 30 | 80Vdc* | UL Midget | 30A | 10kA* | UL 508 Listed<br>cULus 22.2 No. 14-05 | — |
| | | | | 10x38 IEC | 32A aM, 25A gG | | IEC 60947-3 DC23A | |

*Rating may be lower depending on installed fuse. Refer to fuse data sheet.

**Recommended UL Fuse Types**

| AC Voltage | | DC Voltage | |
|---|---|---|---|
| Class CC | Midget | Class CC | Midget |
| LP-CC | KTK | LP-CC | KLM |
| KTK-R | FNM | | DCM |
| FNQ-R | FNQ | | |
| | BAN | | |
| | BAF | | |

**Recommended IEC Fuse Types**

| 10x38 IEC | |
|---|---|
| Part Number Family | IEC Class |
| C10G | gG/gL |
| C10M | aM |

# Compact Circuit Protector (CCP)

UL Class CC, Midget and IEC 10x38 fuses

## Class CC Fuse Motor Sizing Table

| Voltage | Motor Size (Hp) | Motor* FLA (Amps) | Low-Peak® LP-CC (Amp Rating) | | |
|---|---|---|---|---|---|
| | | | Optimal Protection | Code Max | Heavy Start |
| 115Vac, 1-Phase | 0.167 | 4.4 | 9 | 15 | 15 |
| | 0.25 | 5.8 | 12 | 20 | 20 |
| | 0.33 | 7.2 | 15 | 25 | 25 |
| | 0.5 | 9.8 | 30 | 30 | 30 |
| 230Vac, 1-Phase | 0.17 | 2.2 | 4.5 | 10 | 10 |
| | 0.25 | 2.9 | 6 | 10 | 10 |
| | 0.33 | 3.6 | 7 | 15 | 15 |
| | 0.5 | 4.9 | 10 | 15 | 15 |
| | 0.75 | 6.9 | 15 | 25 | 25 |
| | 1 | 8 | 25 | 25 | 30 |
| | 1.5 | 10 | 30 | 30 | 30 |
| 200Vac, 3-Phase | 0.5 | 2.5 | 5 | 10 | 10 |
| | 0.75 | 3.7 | 7.5 | 15 | 15 |
| | 1 | 4.8 | 10 | 15 | 15 |
| | 1.5 | 6.9 | 15 | 25 | 25 |
| | 2 | 7.8 | 25 | 25 | 30 |
| 208Vac, 3-Phase | 0.5 | 2.4 | 5 | 10 | 10 |
| | 0.75 | 3.5 | 7 | 15 | 15 |
| | 1 | 4.6 | 10 | 15 | 15 |
| | 1.5 | 6.6 | 15 | 20 | 25 |
| | 2 | 7.5 | 15 | 25 | 30 |
| 230Vac, 3-Phase | 0.5 | 2.2 | 4.5 | 10 | 10 |
| | 0.75 | 3.2 | 7 | 10 | 12 |
| | 1 | 4.2 | 9 | 15 | 15 |
| | 1.5 | 6 | 12 | 20 | 20 |
| | 2 | 6.8 | 15 | 25 | 25 |
| | 3 | 9.6 | 30 | 30 | 30 |
| 460Vac, 3-Phase | 0.5 | 1.1 | 2.25 | 6 | 6 |
| | 0.75 | 1.6 | 3.2 | 6 | 6.25 |
| | 1 | 2.1 | 4.5 | 10 | 10 |
| | 1.5 | 3 | 6 | 10 | 12 |
| | 2 | 3.4 | 7 | 15 | 15 |
| | 3 | 4.8 | 10 | 15 | 15 |
| | 5 | 7.6 | 25 | 25 | 30 |
| 575Vac, 3-Phase | 0.5 | 0.9 | 1.8 | 3 | 3.5 |
| | 0.75 | 1.3 | 2.8 | 6 | 6 |
| | 1 | 1.7 | 3.5 | 6 | 6.25 |
| | 1.5 | 2.4 | 5 | 10 | 10 |
| | 2 | 2.7 | 5.6 | 10 | 10 |
| | 3 | 3.9 | 8 | 15 | 15 |
| | 5 | 6.1 | 15 | 20 | 20 |
| | 7.5 | 9 | 30 | 30 | 30 |

**Note:** NEMA motors only (no IEC or Design B Energy Efficient). Minimum size if no more than 1 start/hour. Code max if low to moderate reverse/jog/plug applications. Heavy start permitted only if Code Max does not allow motor start-up. For high reverse/jog/plug applications or larger horsepower motors, Class J fuses are recommended. See CCP with CUBEFuse®.

*Based on motor FLA from NEC® Tables 430.248 and 430.250

# Compact Circuit Protector (CCP)

CUBEFuse®




RoHS 2002/95/EC

The revolutionary Cooper Bussmann® CCP is 1/3 the footprint of a circuit breaker. The level of protection provided by the CCP is up to three times the Short-Circuit Current Rating (SCCR) at full voltage than a molded case circuit breaker while providing disconnecting means.

## Product Features and Benefits

- Uses finger-safe IP20 Low-Peak® CUBEFuse® with Class J performance
- Extremely compact design at 25.4mm (1 inch) wide per pole
- High Short-Circuit Current Ratings at 200kA
- Disconnect rated to provide means for load isolation
- Full voltage rated at 600Vac
- UL 98 Listed, horsepower rated, and suitable for branch circuit disconnect and branch circuit protection
- 1-, 2- and 3-pole versions are horsepower rated
- Complies with UL and cULus
- Open Fuse Indication:
  - Local fuse indication lights* are standard
  - Optional wired remote open fuse indication can be utilized to signal a PLC and open a contactor to de-energize all phases, if required
  - Cooper InVision™ Downtime Reduction System wireless indication is also available (not available in Europe)
- Additional open fuse indication can be provided by the CUBEFuse®
- IP20 finger-safe construction with 10 AWG (6mm²) wire or larger
- Built-in switch interlock capability prohibits removing the fuse under load
- Padlockable handle for lockout/tagout procedures

*Circuit must be closed for indication light to illuminate

## Specifications:

- Box Lug and Spade Terminal suitable for line, load or accessory connection
- Box Lug Connection:
  - -18-6 AWG (1 to 16mm²) single or dual rated, solid or stranded – 75°C or higher - Cu only
  - 4 AWG (25mm²) single – 75°C or higher - Cu only
- Spade Terminal Connection: Max. 30A suitable for use with #8-32 UNC (M4) screw
- Torque:
  - 18-10 AWG 20 Lb-In (1-6mm²/3.4N•m)
  - 8-4 AWG 35 Lb-In (10-25mm²/5.8N•m)
- Lockout/tagout: 4mm shank lock or standard pin-out devices
- 35mm DIN rail mount
- Local indication minimum operating voltage:
  - 90Vac/115Vdc

### Agency Information:

- UL 98 Listed, File E302370, Guide WHTY
- cULus to CSA Standard 22.2 No. 4-04, File 302370, Guide WHTY7
- CE Compliant

### Shipping Weight:

- 2.03 lbs (0.92kg) per carton

### Carton Quantity:

- 6 poles

### Environmental Data:

- Storage and operating temperature: -20°C to 75°C**
- Flammability rating: UL 94V0

**For fuse performance under or above 25°C, consult fuse performance derating charts in the Cooper Bussmann publication “Selecting Protective Devices” (SPD) reorder #3002.

# Compact Circuit Protector (CCP)

CUBEFuse®

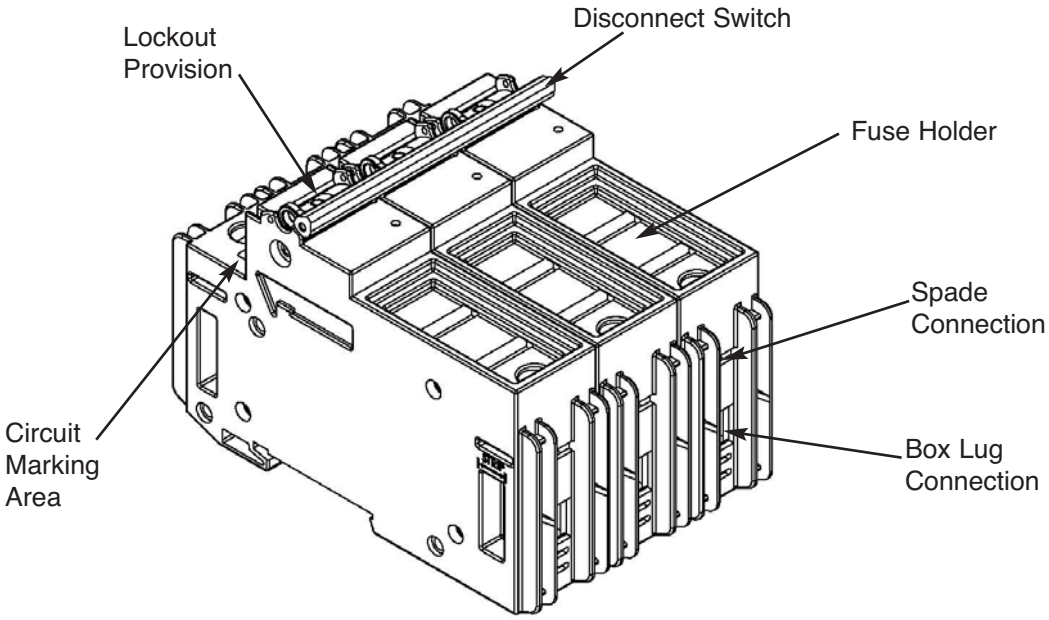


## Technical Ratings

| Catalog Number | Poles | Amp Rating | Voltage Rating | Fuse Type | Max. Fuse Amp Rating | SCCR | Agency Approvals | Hp Ratings |
|---|---|---|---|---|---|---|---|---|
| CCP-1-30CF | 1 | 30 | 600Vac | CUBEFuse* | 30A | 200kA | UL 98 Listed<br>cULus 22.2 No. 4-04 | 1.5Hp@120V |
| CCP-2-30CF | 2 | 30 | 600Vac | CUBEFuse* | 30A | 200kA | UL 98 Listed<br>cULus 22.2 No. 4-04 | 3.0Hp@240V |
| CCP-3-30CF | 3 | 30 | 600Vac | CUBEFuse* | 30A | 200kA | UL 98 Listed<br>cULus 22.2 No. 4-04 | 5Hp@240V<br>15Hp@480V<br>10Hp@600V |
| CCP-1-60CF | 1 | 60 | 600Vac | CUBEFuse* | 60A | 200kA | UL 98 Listed<br>cULus 22.2 No. 4-04 | 3.0Hp@120V |
| CCP-2-60CF | 2 | 60 | 600Vac | CUBEFuse* | 60A | 200kA | UL 98 Listed<br>cULus 22.2 No. 4-04 | 7.5Hp@240V |
| CCP-3-60CF | 3 | 60 | 600Vac | CUBEFuse* | 60A | 200kA | UL 98 Listed<br>cULus 22.2 No. 4-04 | 7.5Hp@240V<br>20Hp@480V<br>10Hp@600V |

*Class J electrical performance

# Compact Circuit Protector (CCP)

CUBEFuse®

## CUBEFuse® Motor Sizing Table

| Voltage | Motor Size (Hp) | Motor* FLA (Amps) | Low-Peak® CUBEFuse® (Amp Rating) Optimal Protection | Code Max | Heavy Start |
|---|---|---|---|---|---|
| 115Vac, 1-Phase | 0.167 | 4.4 | 10 | 10 | 10 |
| | 0.25 | 5.8 | 10 | 15 | 15 |
| | 0.333 | 7.2 | 15 | 15 | 15 |
| | 0.5 | 9.8 | 15 | 20 | 20 |
| | 0.75 | 13.8 | 25 | 25 | 30 |
| | 1 | 16 | 25 | 30 | 35 |
| | 1.5 | 20 | 30 | 35 | 45 |
| | 2 | 24 | 40 | 45 | 50 |
| | 3** | 34 | 50 | 60 | N/A |
| 230Vac, 1-Phase | 0.167 | 2.2 | 6 | 6 | 6 |
| | 0.25 | 2.9 | 6 | 6 | 6 |
| | 0.333 | 3.6 | 6 | 10 | 10 |
| | 0.5 | 4.9 | 10 | 10 | 10 |
| | 0.75 | 6.9 | 15 | 15 | 15 |
| | 1 | 8 | 15 | 15 | 17.5 |
| | 1.5 | 10 | 15 | 20 | 20 |
| | 2 | 12 | 20 | 25 | 25 |
| | 3 | 17 | 25 | 30 | 35 |
| | 5 | 28 | 45 | 50 | 60 |
| | 7.5** | 40 | 60 | N/A | N/A |
| 200Vac, 3-Phase | 0.5 | 2.5 | 6 | 6 | 6 |
| | 0.75 | 3.7 | 6 | 10 | 10 |
| | 1 | 4.8 | 10 | 10 | 10 |
| | 1.5 | 6.9 | 15 | 15 | 15 |
| | 2 | 7.8 | 15 | 15 | 17.5 |
| | 3 | 11 | 17.5 | 20 | 20 |
| | 5 | 17.5 | 30 | 35 | 35 |
| | 7.5** | 25.3 | 40 | 45 | 50 |
| 208Vac, 3-Phase | 0.5 | 2.4 | 6 | 6 | 6 |
| | 0.75 | 3.5 | 6 | 10 | 10 |
| | 1 | 4.6 | 10 | 10 | 10 |
| | 1.5 | 6.6 | 10 | 15 | 15 |
| | 2 | 7.5 | 15 | 15 | 15 |
| | 3 | 10.6 | 17.5 | 20 | 20 |
| | 5 | 16.7 | 25 | 30 | 35 |
| | 7.5** | 24.2 | 40 | 45 | 50 |

| Voltage | Motor Size (Hp) | Motor* FLA (Amps) | Low-Peak® CUBEFuse® (Amp Rating) Optimal Protection | Code Max | Heavy Start |
|---|---|---|---|---|---|
| 230Vac, 3-Phase | 0.5 | 2.2 | 6 | 6 | 6 |
| | 0.75 | 3.2 | 6 | 6 | 6 |
| | 1 | 4.2 | 10 | 10 | 10 |
| | 1.5 | 6 | 10 | 15 | 15 |
| | 2 | 6.8 | 15 | 15 | 15 |
| | 3 | 9.6 | 15 | 20 | 20 |
| | 5 | 15.2 | 25 | 30 | 30 |
| | 7.5** | 22 | 35 | 40 | 45 |
| 460Vac, 3-Phase | 0.5 | 1.1 | 3 | 3 | 3 |
| | 0.75 | 1.6 | 3 | 3 | 3 |
| | 1 | 2.1 | 6 | 6 | 6 |
| | 1.5 | 3 | 6 | 6 | 6 |
| | 2 | 3.4 | 6 | 6 | 6 |
| | 3 | 4.8 | 10 | 10 | 10 |
| | 5 | 7.6 | 15 | 15 | 15 |
| | 7.5 | 11 | 17.5 | 20 | 20 |
| | 10 | 14 | 25 | 25 | 30 |
| | 15 | 21 | 35 | 40 | 45 |
| | 20** | 27 | 40 | 50 | 60 |
| 575Vac, 3-Phase | 0.5 | 0.9 | 3 | 3 | 3 |
| | 0.75 | 1.3 | 3 | 3 | 3 |
| | 1 | 1.7 | 3 | 3 | 3 |
| | 1.5 | 2.4 | 6 | 6 | 6 |
| | 2 | 2.7 | 6 | 6 | 6 |
| | 3 | 3.9 | 6 | 10 | 10 |
| | 5 | 6.1 | 10 | 15 | 15 |
| | 7.5 | 9 | 15 | 20 | 20 |
| | 10** | 11 | 17.5 | 20 | 20 |

**Note:** Use Code Max column for low to moderate reverse/jog/plug applications. Heavy Start permitted only if Code Max does not allow motor start-up.

*Based on motor FLA from NEC® Tables 430.248 and 430.250

**Max. Hp rating for the CCPB 60 Amp device at specified voltage

# Compact Circuit Protector (CCP) Accessories

UL Class CC, Midget, IEC 10x38 fuses, and CUBEFuse®

## Recommended Lockout Devices

| CCP Version | Bradly Pin-Out P/N | Ideal P/N | Padlock |
|---|---|---|---|
| Class CC, Midget, IEC 10x38 | 90844 | 44-779 | 4mm shank |
| CUBEFuse® | 90850 | 44-784 | 4mm shank |

## Accessories for use with Class CC, Midget, IEC 10x38 and CUBEFuse® CCP

| Catalog Number | Description | Configuration | Signal Output | Minimum Circuit Voltage | Agency Approvals |
|---|---|---|---|---|---|
| CCP-AUX | Auxiliary Contacts NO+NC for Switch Status | 1 per CCP | 5A/240Vac | – | UL 98 Recognized cURus 22.2 No. 4-04, IEC 60947-5-1 AC15 |
| CCP-PLC-IND | Wired Remote Fuse Indication for PLC Applications | 1 per CCP | 24Vdc | 100Vac | UL 98 Recognized cURus 22.2 No. 4-04 |
| ICM-DIN* | Intelligent Circuit Monitor for Cooper InVision™ Downtime Reduction System | 1 per pole | RF Signal | 100Vac | UL 508 Listed CSA Certified |

*Refer to Data Sheet 1068, InVision Downtime Reduction System (not available in Europe)



CCP-AUX



CCP-PLC-IND
(Includes spade terminals)



ICM-DIN

# Auxiliary Contact – CCP-AUX

UL Class CC, Midget, IEC 10x38 fuses, and CUBEFuse®



RoHS 2002/95/EC

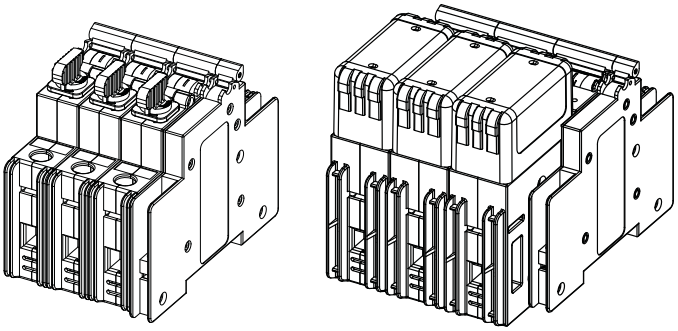

**CCP-AUX installed on a CCP-3-xx**

## Description

NO+NC contact output to indicate the status of the switching mechanism on the CCP

**Specifications:**

- Rated Current: 5A
- Rated Voltage: 240Vac
- NC/NO contacts are closed/open when the CCP switch is in the “ON” position (closed)
- Flammability Rating: UL94V0

**Agency Information:**

- UL 98 File E155130, Guide WHTY2
- cULus to CSA Standard 22.2 No. 4-04
- IEC 60947-5-1

**Wiring:**

- 20-16 AWG (1 to 2.5mm$^2$) wire
- Torque 5 Lb-In (0.68N•m)
- For use with only 75°C Cu wire

**Packaging:**

- The CCP-AUX is packaged individually
- A single unit is capable of mounting to a 1-, 2-, or 3-pole CCP

**Installation Technique:**

- Mounts on the right side of the CCP, and mechanically interlocks with the CCP switch handle with hardware provided

**IP20 Rating:** Yes

**Environmental Data:**

- Storage and Operating Temperature: -20°C to 75°C

***De-energize all circuits before installing or removing any CCP-AUX devices and follow all prescribed safety procedures.***

# Remote Fuse Monitoring Accessory – CCP-PLC-IND

UL Class CC, Midget, IEC 10x38 fuses, and CUBEFuse®



RoHS 2002/95/EC

**CCP-PLC-IND installed on a CCP-3-xx**

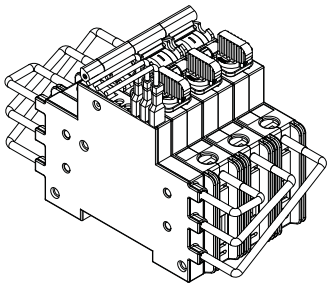

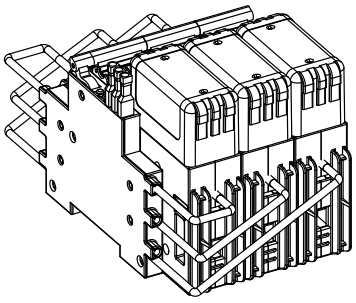

## Description

A resetable three-phase remote fuse monitor that integrates with a Programmable Logic Controller (PLC) or other monitoring and control equipment

**Specifications:**

- **Power Input**: 24Vdc / 5mA
- **Output Signals**: Digital 0Vdc (Low), 24Vdc (High)
  - 0Vdc Low – Fuse is good
  - 24Vdc High – Fuse has opened

  When the fuse opens, the output signal is sent high and will remain high until the unit is reset
- **Rated Impulse Voltage**: 8kV
- **Local Indication**: Two distinct LEDs indicate unit power (green) and open fuse (red). Upon the replacement of the fuse, the actuation of the reset switch will reset the open fuse LED
- **Flammability Rating**: UL 94V0

**Wiring:**

- For power, signal and ground connections use 22-24AWG ($0.25mm^2$) 300V rated wire

**Emissions and Immunity Testing:**

- Electrostatic Discharge IEC 61000-4-2
- Electrical Fast Transient/Burst IEC 6100-4-4
- Surge Immunity IEC61000-4-5

**Packaging:**

- The CCP-PLC-IND is packaged individually
- A single unit monitors up to three phases
- Package includes 0.110” (2.8mm) quick connects for power, signal and ground connections

**Minimum Circuit Voltage:**

- Minimum circuit voltage required across the CCP is 100Vac for the remote indication device to operate

**Installation Technique:**

- Mounts on the left side of the CCP and mechanically interlocks with the CCP switch handle with hardware provided

**IP20 Rating:** Yes

**Environmental Data:**

- Storage and Operating Temperature: -20°C to 75°C

**Agency Information:**

- UL 98 File E155130, Guide WHTY2
- cULus to CSA Standard 22.2 No. 4-04

**PLC Programming:**

- The CCP-PLC-IND signal line is designed to provide a digital input to a PLC I/O card
- Programmable Logic Control program must be written to properly interpret the input signal to the PLC
- The PLC program should check for consecutive high signals before taking action on a critical process

***De-energize all circuits before installing or removing any CCP-PLC-IND devices and follow all prescribed safety procedures.***

# Remote Fuse Monitoring Accessory – CCP-PLC-IND

UL Class CC, Midget and IEC 10x38 fuses, and CUBEFuse®

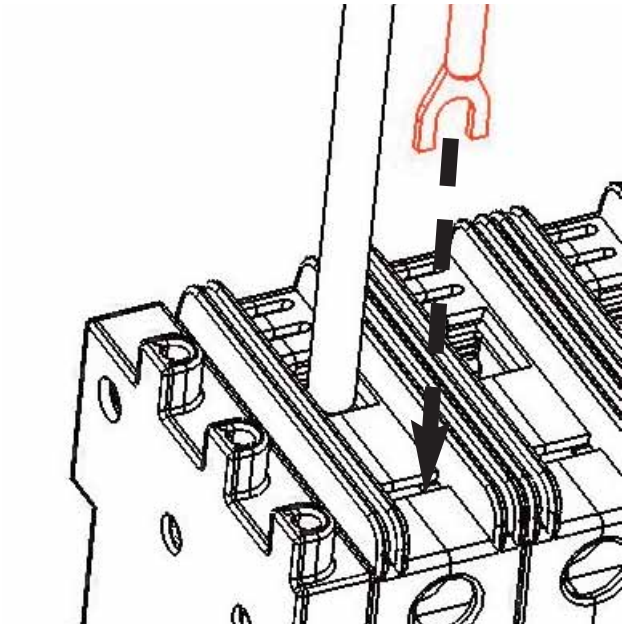

**Connection from CCP-PLC-IND to CCP**

Connect leads from CCP-PLC-IND to the terminals as shown. There is a dedicated terminal on the CCP to accept the spade connectors from the CCP-PLC-IND.

NOTE: When monitoring a 1-pole or 2-pole CCP, trim unused leads

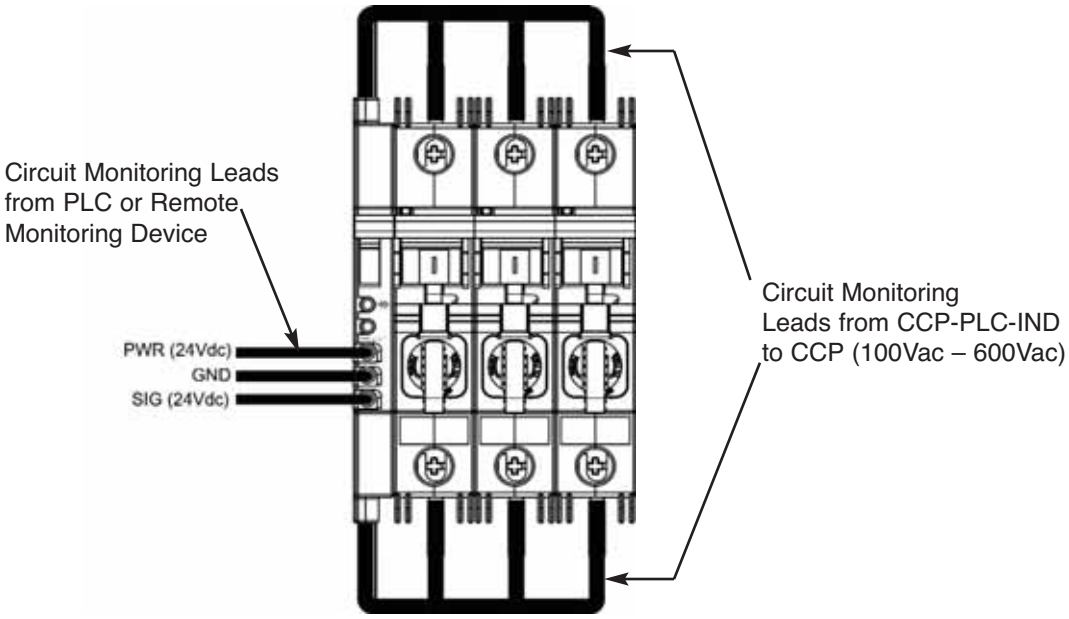


**Connections for CCP-PLC-IND from a CCP-3 to a remote monitoring device**

# Compact Circuit Protector (CCP)

UL Class CC, Midget, IEC 10x38 fuses, and CUBEFuse®

**Dimensions - in (mm)**
**CCP for Class CC, Midget and IEC 10x38**

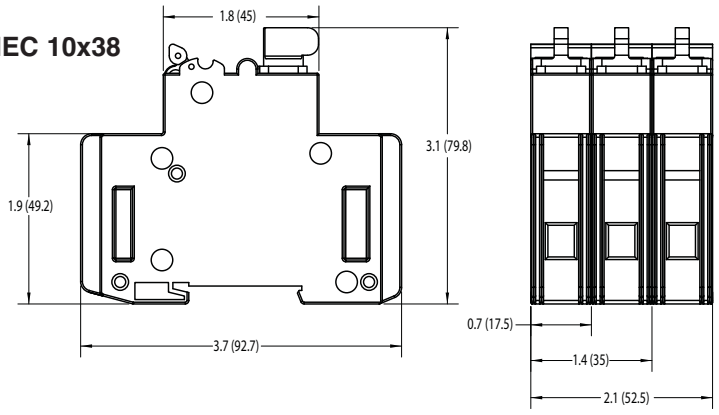


**CCP with CUBEFuse®**

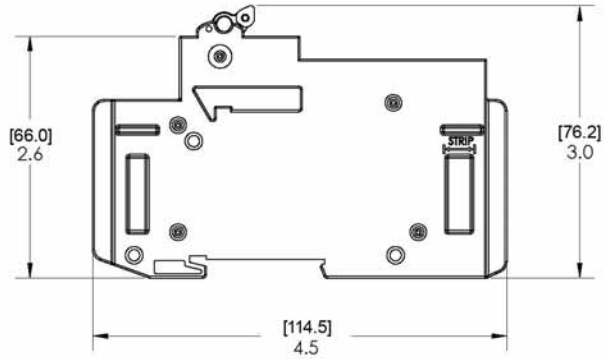


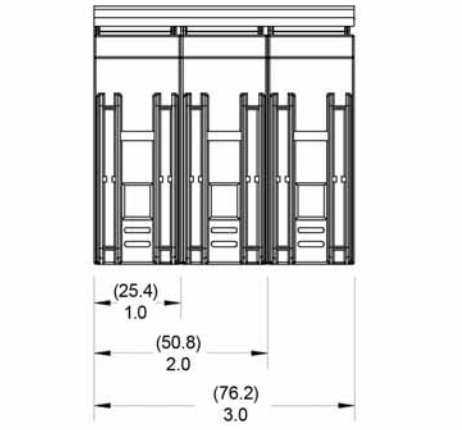


**CCP-AUX**

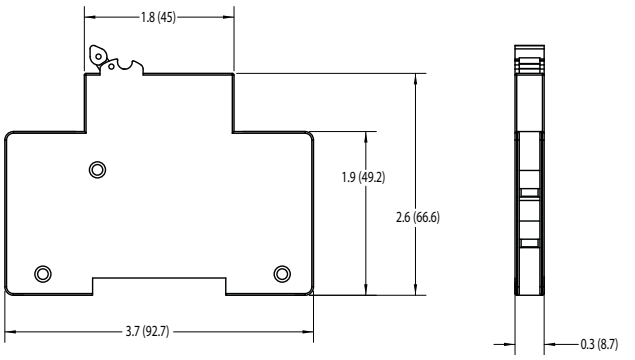


**CCP-PLC-IND**

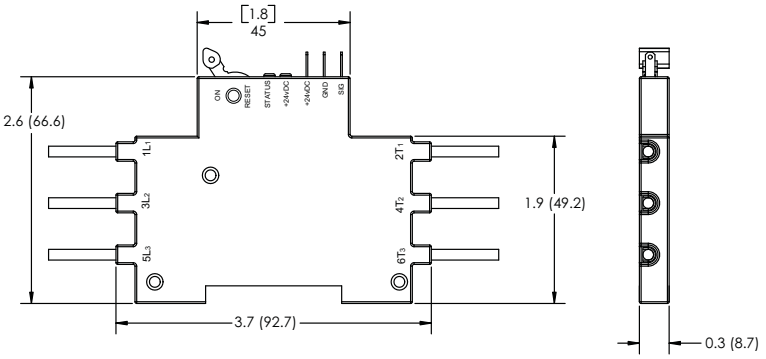


The only controlled copy of this Data Sheet is the electronic read-only version located on the Cooper Bussmann Network Drive. All other copies of this document are by definition uncontrolled. This bulletin is intended to clearly present comprehensive product data and provide technical information that will help the end user with design applications. Cooper Bussmann reserves the right, without notice, to change design or construction of any products and to discontinue or limit distribution of any products. Cooper Bussmann also reserves the right to change or update, without notice, any technical information contained in this bulletin. Once a product has been selected, it should be tested by the user in all possible applications.

© 2008 Cooper Bussmann
St. Louis, MO 63178
636-394-2877
www.cooperbussmann.com