Technical Data Sheet

Hinged Door Isolators

CDPD61
Issue 1

Hinged Door — IP41

General Description

Supplied in 'hinged door' grey powder coated sheet steel enclosures, these IP41 sealed assemblies are suitable for most indoor industrial applications. Supplied as 'Switch-Disconnectors' or 'Fuse Combination Units' all items are supplied in generously sized enclosures which helps to avoid the need for extension boxes.



Design Features

- Safety handle - when padlocked in the 'Off' position, the enclosure door cannot be opened. Capable of accepting up to three padlocks in the 'Off' position. (Locking in 'On' position on request)
- Door interlock handle can be defeated to enable emergency opening or for testing purposes. (Must be carried out by a competent person)
- Removable gland plates on top & bottom on enclosures 200A and above.
- Enclosure size 2 and above isolating switches are mounted on a removable galvanised chassis plate.
- All Fuse Combination Units are supplied complete with a set of fully rated fuse links.
- Terminal covers are supplied for incoming terminals.
- Earth terminals fitted to door and gland plates.

Switch-Disconnectors (O-I)

Catalogue Numbers

Rating	Format	Cat. No.	Encl. Size
32A	3P+N	SD41G00323N	1
	3P+NL	SD41G00323NL	1
63A	3P+N	SD41G00633N	1
	3P+NL	SD41G00633NL	1
	6P+2E/B	SD41G00636EB	2
80A	3P+N	SD41GC00803N	1
	3P+NL	SD41GC00803NL	1
100A	3P+N	SD41GC01003N	3A
	3P+NL	SD41GC01003NL	3A
125A	3P+N	SD41GC01253N	4A
	3P+NL	SD41GC01253NL	4A
160A	3P+N	SD41GC01603N	4A
	3P+NL	SD41GC01603NL	4A
200A	3P+N	SD41GC02003N	5A
	3P+NL	SD41GC02003NL	5A
250A	3P+N	SD41G02503N	5
	3P+NL	SD41G02503NL	5
400A	3P+N	SD41G04003N	6
	3P+NL	SD41G04003NL	6
630A	3P+N	SD41G06303N	8
	3P+NL	SD41G06303NL	8
800A	3P+N	SD41G08003N	8
	3P+NL	SD41G08003NL	8
1000A	3P+N	SD41G10003N	10
	3P+NL	SD41G10003NL	10

'N' = switched neutral
'NL' = Unswitched neutral (100% rated 32A-200A, 50% rated 250A-1000A)
'EB' = Early break auxiliary contacts

Fuse Combination Units (O-I)

Catalogue Numbers

Rating	Format	Cat. No.	Enclosure Size
32A	3P+NL	SDF41G00323N	2
63A	3P+NL	SDF41G00633N	2
100A	3P+NL	SDF41G01003N	4A
125A	3P+NL	SDF41G01253N	4
160A	3P+NL	SDF41G01603N	4
200A	3P+NL	SDF41G02003N	5
250A	3P+NL	SDF41G02503N	5
315A	3P+NL	SDF41G03153N	6
400A	3P+NL	SDF41G04003N	6
630A	3P+NL	SDF41G06303N	8

Please note Fuse Combination Units are supplied unswitched neutral.

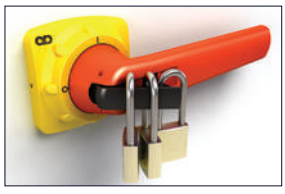
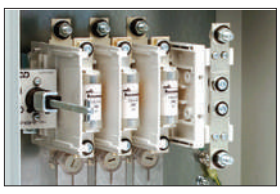
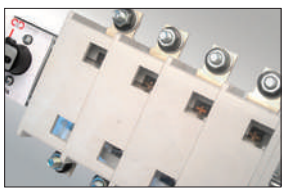


CRAIG & DERRICOTT

www.craigandderricott.com

Craig & Derricott Ltd
Hall Lane, Walsall Wood,
Walsall, West Midlands WS9 9DP
t: +44(0)1543 375541 f: +44(0)1543 361619
e: sales@craigandderricott.com

Technical Data Sheet

Hinged Door Isolators

CDPD61
Issue 1

Hinged Door — IP65

General Description

In addition to the basic features of the IP41 enclosed range, the IP65 sealed family of products introduces:-

- IP65 Handle assemblies
- Sealed gland plates
- Up to 1000A Switch-Disconnectors
- Changeover Switch-Disconnectors
- Grey or Stainless steel enclosures (Red also available)

Design Features

- Safety handle - when padlocked in the 'Off' position, the enclosure door cannot be opened. Capable of accepting up to three padlocks in the 'Off' position. ('On' position on request)
- Door interlock handle can be defeated to enable emergency opening or for testing purposes. (Must be carried out by a competent person)
- Removable gland plates on top & bottom of all enclosures.
- Enclosure size 2 and above isolating switches are mounted on a removable galvanised chassis plate.
- All Fuse Combination Units are supplied complete with a set of fully rated fuse links.
- Castell Lock options available on request.
- Stainless steel enclosures for severe environments.
- Changeover Switch-Disconnectors in four pole format
- Enclosures finished Red (RAL 3020) are available to order, please contact our Sales team for details



The internal arrangement
of a typical Fuse Combination Unit

Catalogue Numbers

Switch-Disconnectors* (O-I)

Rating	Format	Sheet steel (Grey)	Stainless Steel	Encl. Size
32A	3P+N	SDG00323N	SDS00323N	1
	3P+NL	SDG00323NL	SDS00323NL	1
63A	3P+N	SDG00633N	SDS00633N	1
	3P+NL	SDG00633NL	SDS00633NL	1
	6P+2E/B	SDG00636EB	SDS00636EB	2
80A	3P+N	SDGC00803N	SDSC00803N	1
	3P+NL	SDGC00803NL	SDSC00803NL	1
100A	3P+N	SDGC01003N	SDSC01003N	3A
	3P+NL	SDGC01003NL	SDSC01003NL	3A
125A	3P+N	SDGC01253N	SDSC01253N	4A
	3P+NL	SDGC01253NL	SDSC01253NL	4A
160A	3P+N	SDGC01603N	SDSC01603N	4A
	3P+NL	SDGC01603NL	SDSC01603NL	4A
200A	3P+N	SDGC02003N	SDSC02003N	5A
	3P+NL	SDGC02003NL	SDSC02003NL	5A
250A	3P+N	SDG02503N	SDS02503N	5
	3P+NL	SDG02503NL	SDS02503NL	5
400A	3P+N	SDG04003N	SDS04003N	6
	3P+NL	SDG04003NL	SDS04003NL	6
630A	3P+N	SDG06303N	SDS06303N	8
	3P+NL	SDG06303NL	SDS06303NL	8
800A	3P+N	SDG08003N	SDS08003N	8
	3P+NL	SDG08003NL	SDS08003NL	8
1000A	3P+N	SDG10003N	SDS10003N	10
	3P+NL	SDG10003NL	SDS10003NL	10

Fuse Combination Units* (O-I)

Rating	Format	Sheet steel (Grey)	Stainless Steel	Encl. Size
32A	3P+NL	SDFG00323N	SDFS00323N	2
63A	3P+NL	SDFG00633N	SDFS00633N	2
100A	3P+NL	SDFG01003N	SDFS01003N	3
125A	3P+NL	SDFG01253N	SDFS01253N	4
160A	3P+NL	SDFG01603N	SDFS01603N	4
200A	3P+NL	SDFG02003N	SDFS02003N	5
250A	3P+NL	SDFG02503N	SDFS02503N	5
315A	3P+NL	SDFG03153N	SDFS03153N	6
400A	3P+NL	SDFG04003N	SDFS04003N	6
630A	3P+NL	SDFG06303N	SDFS06303N	8

Changeover Switch Disconnectors (I-O-II)

Rating	Format	Sheet steel (Grey)	Stainless Steel	Encl. Size
63A	4P C/O	SCODGC00634	SCODSC00634	3
100A	4P C/O	SCODGC01004	SCODSC01004	3
125A	4P C/O	SCODGC01254	SCODSC01254	5
160A	4P C/O	SCODGC01604	SCODSC01604	5
200A	4P C/O	SCODGC02004	SCODSC02004	5
250A	4P C/O	SCODG02504	SCODS02504	7
400A	4P C/O	SCODG04004	SCODS04004	9
630A	4P C/O	SCODG06304	SCODS06304	9

'N' = switched neutral
'NL' = Unswitched neutral
'EB' = Early break auxiliary contacts

* painted Red

www.craigandderricott.com

Craig & Derricott Ltd
Hall Lane, Walsall Wood,
Walsall, West Midlands WS9 9DP
t: +44(0)1543 375541 f: +44(0)1543 361619
e: sales@craigandderricott.com

Hinged Door Isolators

CDPD61
Issue 1

Accessories

Auxiliary Contacts

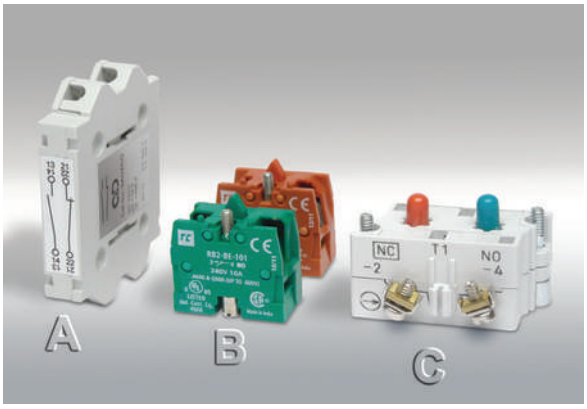

Add-on auxiliary blocks are available for all hinged door products. Please select the blocks/kit from the tables below.

All auxiliaries are supplied as 1 N/O+1 N/C pair. All N/O auxiliary contacts are early break with respect to the main poles when switching from 'On' to 'Off'.

For additional contacts or details regarding auxiliaries for Changeover Switch-Disconnectors please contact our sales team.

Catalogue Numbers

For Switch-Disconnectors

Rating (A)	63-200	250	400-800	1000
Cat No	SAUXCO	SAUXKITB	SAUXKITC	SAUXKITD
Type	A	C	C	B

For Fuse Combination Units

Rating (A)	32-160	200-400	630
Cat No	SAUXKITA	SAUXKITC	SAUXKITD
Type	B	C	B

Fuse Links



IEC/BS EN 60269
(BS88) fuse links

All of the Fuse Combination Units are supplied fitted with a set of fully rated IEC/BS EN 60269 (BS88) fuse links. Replacement can be supplied as individual fuse links to the table below.

Fuse links can be fitted to a lower rating to suit a particular load: please refer to the rating table below to maintain the correct size/tag format (A2, A4, B1 etc.).

Rating (A)	32	63	100	125	160	200	250	315	400	630
C&D Cat. No.	SFL32	SFL63	SFL100	SFL125	SFL160	SFL200	SFL250	SFL315	SFL400	SFL630
Cooper Bussmann Cat. No.	AA032	BA063	CE0100	DE0125	DD160	DD200	ED250	ED315	ED400	FF630
Lawson Cat. No.	TIA32	TIS63	TCP100	TFP125	TF160	TF200	TKF250	TKF315	TMF400	3T630
BS fuse format	A2, A3	A2, A3	A4	A4	B1, B2	B1-B2	B1-B2	B1-B4	B1-B4	C1-C3
Fuse Fixing CRS (mm)	73 nom.	73 nom.	94 nom.	94 nom.	111 nom.	111 nom.	111 nom.	111 nom.	111 nom.	133/184 nom.

Terminal Covers

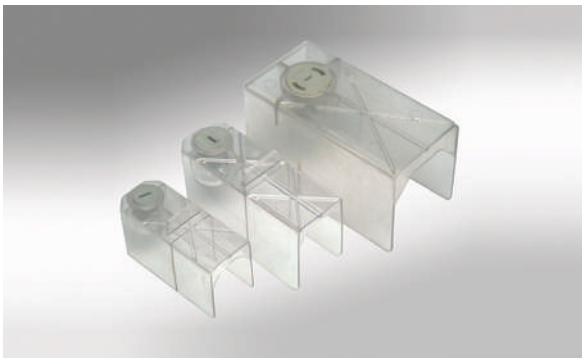

Terminal protection is provided on all items for live incoming terminals; spare terminal covers are available for replacement or extending the protection to the outgoing terminals. (Not available for 800A & 1000A switch-disconnectors.)

Catalogue Numbers - individual covers

For Switch-Disconnectors

Isol Rating (A)	63-160	200	250-400	630
Cat No	Not reqd	STS1	STS2	STS4

For Fuse Combination Units

Isol Rating (A)	32-63	100-160	200-400	630
Cat No	Not reqd	STS1	STS2	STS3

CRAIG & DERRICOTT

www.craigandderricott.com

Craig & Derricott Ltd
Hall Lane, Walsall Wood,
Walsall, West Midlands WS9 9DP
t: +44(0)1543 375541 f: +44(0)1543 361619
e: sales@craigandderricott.com

Hinged Door Isolators

CDPD61
Issue 1

Dimensions

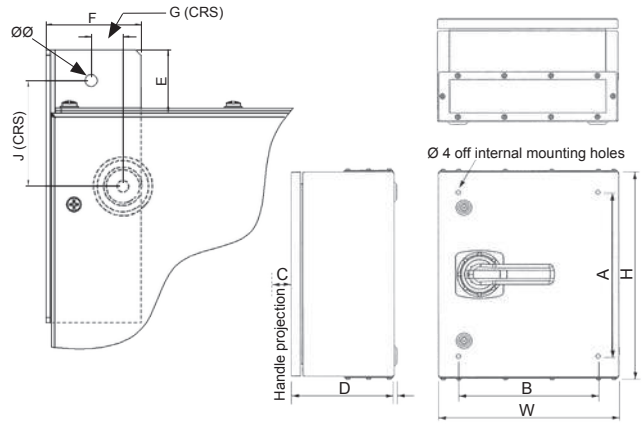

External Mounting Feet (Four per set)

Enclosure Sizes 1 & 2	Cat No. SEFL1/KIT
Enclosure Sizes 3 - 7	Cat No. SEFL2/KIT
Enclosure Sizes 8 - 10	Cat No. SEFL3/KIT

Sheet Steel Enclosure Sizes

Dim	1	2	3	3A	4	4A	5	5A	6	7	8	9	10
H	250	250	400	350	500	400	550	550	750	750	900	900	1000
W	250	300	350	300	350	300	450	400	450	600	600	600	750
D	100	200	200	175	200	175	250	175	275	300	300	400	300
A	170	170	320	270	420	320	470	470	670	670	820	820	920
B	170	220	270	220	270	220	370	320	370	520	520	520	670
C	40	67	67	67	67	67	67	67	67	67	67	67	67
Ø	6.5	6.5	8.5	8.5	8.5	8.5	8.5	8.5	8.5	8.5	10.5	10.5	10.5

External Feet

E	35	35	35	35	35	35	35	35	35	35	35	35	35
F	53	58	58	58	58	58	58	58	58	58	58	58	58
G	18	18	13	13	13	13	13	13	13	13	13	13	13
J	58	58	58	58	58	58	58	58	58	58	58	58	58
ØØ	6.5	6.5	8.5	8.5	8.5	8.5	8.5	8.5	8.5	8.5	10.5	10.5	10.5

Technical Specification — Switch-Disconnectors

Data supplied against tests to IEC/BS EN 60947-3

				Rating (A)													
				3P	3P	6P	3P	3P	3P	3P	3P	3P	3P	3P	3P	3P	3P
Application	Sym	Unit	Category	32	63	63	80	100	125	160	200	250	400	630	800	1000	
Rated thermal current	I_{the}	A		32	63	63	80	100	125	160	200	250	500	630	720	1000	
Rated insulation voltage	U_i	V		690	690	690	690	1000	1000	1000	1000	1000	1000	1000	1000	1000	
Rated impulse voltage	U_{imp}	kV		6	6	6	6	8	8	8	8	12	12	12	12	8	
Rated operational current (AC)	I_e	A	400V - AC21A	32	63	63	80	100	125	160	200	250*	400*	630*	800*	1000*	
			690V - AC21A	32	63	63	80	100	125	160	200	250	400	630	800	1000	
			400V - AC22A	-	-	-	-	100	125	160	200	250*	400*	630*	800*	1000*	
			690V - AC22A	-	-	-	-	100	125	160	160	250	400	630	800	-	
			400V - AC23A	29	48	48	56	100	112	128	128	250*	400*	630*	720*	1000	
			690V - AC23A	17	33	33	33	-	-	-	-	250	350	350	350	-	
Rated operational current (DC) (/poles in series)	I_e	A	Up to 48V - DC21A	32/1	63/1	63/1	80/1	-	-	-	-	250/2	400/2	630/1	800/1	1000/1	
			220V - DC21A	32/3	63/4	1/1	80/4	-	-	-	-	250/2	400/2	630/2	800/2	1000/3	
			Up to 48V - DC22A	-	-	-	-	-	-	-	-	250/2	400/1	630/1	800/1	-	
			220V - DC22A	-	-	-	-	-	-	-	-	250/2	400/2	630/2	800/2	-	
			Up to 48V - DC23A	-	-	-	-	-	-	-	-	250/2	400/1	630/1	800/1	-	
			220V - DC23A	-	-	-	-	-	-	-	-	250/2	400/2	630/2	630/2	-	
Rated operational power	P_e	kW	400/415V - AC23A	15	25	25	30	59	63	75	75	132	200	315	355	540	
			690V - AC23A	15	30	30	30	51	55	55	55	200	315	355	355	-	
Short circuit making capacity	I_{cm}	kA	Peak value	1.4	2.9	2.9	3.0	3.7	4.0	5.0	5.0	35	65	80	80	105	
Short circuit withstand (1sec)	I_{cw}	kA	rms value	0.6	1.3	1.3	1.4	2.6	2.8	3.0	3.0	8	17	17	17	50	
Min. mechanical endurance		-	Operations (10^3)	250	250	500	250	50	50	50	50	16	10	10	10	6	
Min. electrical endurance		-	415V - at 0.65 pf	-	-	-	-	-	-	-	-	1,000	1,000	500	500	500	
Connecting capacity		-	Terminal type														
		mm^2	Min/Max	2.5/10	2.5/25	2.5/25	-/25	-/70	-/70	-/70	-/95						
		mm	Stud/Cu palm width	-	-	-	-	-	-	-	8x25	10x30	10x30	12x40	12x40	12x60	
		Nm	Tightening torque	1.2	1.3	1.3	2	2	2	2	12	25	25	40	40	40	

* All AC21, AC22 & AC23 tests carried out at 415V

CRAIG & DERRICOTT

www.craigandderricott.com

Craig & Derricott Ltd
Hall Lane, Walsall Wood,
Walsall, West Midlands WS9 9DP
t: +44(0)1543 375541 f: +44(0)1543 361619
e: sales@craigandderricott.com

Hinged Door Isolators

CDPD61
Issue 1

Technical Specification — Fuse Combination Units

Data supplied against tests to IEC/BS EN 60947-3				Rating (A)									
Application	Sym	Unit	Category	32	63	100	125	160	200	250	315	400	630
Rated thermal current	I_{the}	A		32	63	100	125	160	200	250	315	400	630
Rated insulation voltage	U_i	V		750	750	750	750	750	750	750	750	750	750
Rated impulse voltage	U_{imp}	kV		12	12	12	12	12	12	12	12	12	12
Rated operational current (AC)	I_e	A	415V - AC23A	32	63	100	125	160	200	250	315	400	630
Rated operational current (DC)*			220V - DC23A	-	-	100	125	160	200	250	315	400	630
Rated making capacity (AC23A)		A	415V, 0.35 pf	320	630	1,000	1,250	1,600	2,000	2,500	3,150	4,000	6,300
Rated breaking capacity (AC23A)		A	415V, 0.35 pf	256	504	800	1,000	1,280	1,600	2,000	2,520	3,200	5,040
Rated Conditional (Fused) short circuit		kA	S/C current rms	80	80	80	80	80	80	80	80	80	80
		A	back-up fuse	32	63	100	125	160	200	250	315	400	630
Min. mechanical endurance		-	Operations	25,000	25,000	15,000	15,000	15,000	10,000	10,000	10,000	10,000	6,000
Min. electrical endurance		-	415V - at 0.65 pf	1,500	1,500	1,000	1,000	1,000	1,000	1,000	1,000	1,000	1,000
BS fuse format				A2	A2	A4	A4	B1, B2	B1, B2	B1, B2	B1, B4	B1, B4	C1, C3
Connecting capacity		-	Terminal type										
		mm^2	Min/Max	16	25	95	95	120	240	240	300	300	400
		mm	Stud/Cu palm width	-	-	8x20	8x20	8x20	10x25	10x25	10x25	10x25	12x50
		Nm	Tightening torque	3.5	5.5	9	12	16	25	30	35	45	50

* Two poles in series

Technical Specification — Changeover Switch-Disconnectors

Data supplied against tests to BS EN 60947-3				Rating (A)							
Application	Sym	Unit	Category	63	100	125	160	200	250	400	630
Rated thermal current	I_{the}	A		63	100	125	160	200	250	400	630
Rated insulation voltage	U_i	V		750	750	1000	1000	1000	1000	1000	1000
Rated impulse voltage	U_{imp}	kV		6	6	6	6	6	12	12	12
Rated operational current	I_e	A	415V - AC22A	63	100	125	160	200	250	400	630
			415V - AC23A	63	100	125	160	200	250	400	630
Rated making capacity (AC23A)		A	415V, 0.35 pf	630	630	1,250	1,600	2,000	2,500	4,000	6,300
Rated breaking capacity (AC23A)		A	415V, 0.35 pf	504	504	1,000	1,280	1,600	2,000	3,200	5,040
Short circuit current		kA	rms (with fuses)	80	80	80	80	80	100	100	80
Rated S/C making capacity		kA	Peak	15	15	20	20	20	30	40	50
Min. mechanical endurance		-	Operations	20,000	20,000	10,000	10,000	10,000	10,000	10,000	10,000
Min. electrical endurance		-	415V - at 0.65 pf	2,500	1,500	1,000	1,000	1,000	1,000	1,000	500
Connecting capacity		-	Terminal type								
		mm^2	Max	35	35	95	95	95	240	300	400
		mm	Stud/Cu palm width	6x12	6x12	8x22	8x22	8x22	10x25	10x25	12x50
		Nm	Tightening torque	3	3	10	10	10	30	45	50

CRAIG & DERRICOTT

www.craigandderricott.com

Craig & Derricott Ltd
Hall Lane, Walsall Wood,
Walsall, West Midlands WS9 9DP
t: +44(0)1543 375541 f: +44(0)1543 361619
e: sales@craigandderricott.com