# LUS211-40-34-LI2UPN8-H1141
# Ultrasonic Sensor – Level Control

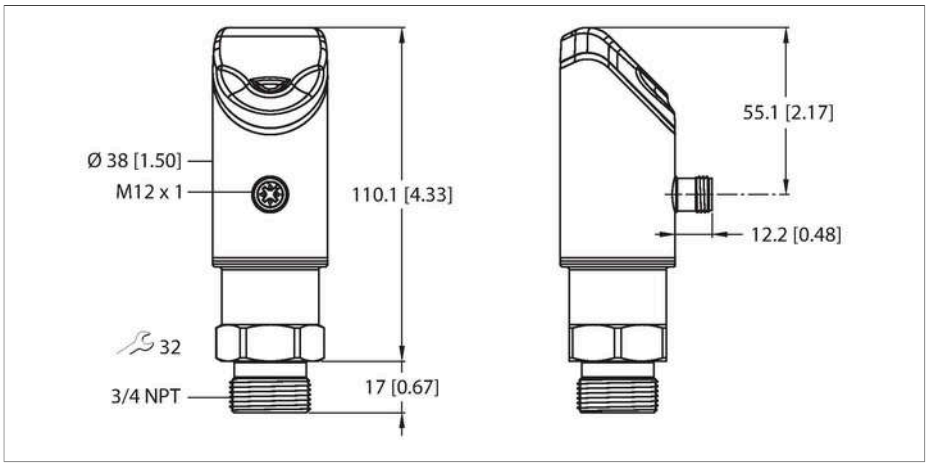




## Technical data

| | |
|---|---|
| Type | LUS211-40-34-LI2UPN8-H1141 |
| Ident. no. | 100003168 |
| **Ultrasonic data** | |
| Function | Ultrasonic diffuse mode sensor |
| Range | 5…400 mm |
| Resolution | 0.5 mm |
| Minimum measuring range | 50 mm |
| Minimum switching range | 5 mm |
| Ultrasound frequency | 320 kHz |
| Temperature drift | ± 1.5 % of full scale |
| Edge lengths of the nominal actuator | 20 mm |
| Approach speed | ≤ 3 m/s |
| Pass speed | ≤ 1.3 m/s |
| **Electrical data** | |
| Operating voltage | 17…33 VDC |
| No-load current | ≤ 150 mA |
| Load resistance | ≤ 1000 Ω |
| Residual current | ≤ 0.1 mA |
| Response time typical | < 60 ms |
| Readiness delay | ≤ 300 ms |
| Communication protocol | IO-Link |
| Output function | NO/NC, PNP/NPN, analog output |
| Output 1 | Switching output or IO-Link mode |
| Output 2 | Analog output |
| Current output | 4…20 mA |
| Load resistance, current output | ≤ 0.5 kΩ |

## Features

- 4-digit, two-colored, 14-segment display, rotatable by 180°
- Housing is rotatable after plugging the process connection
- ¾" NPT process connection
- Blind zone: 0.5 cm
- Range: 40 cm
- Resolution: 0.5 mm
- Cone angle of sonic cone: 15°
- 1 × switching output, PNP/NPN
- 1 × analog output, 4…20 mA / 0…10 V / additional switching output, PNP/NPN
- NO/NC programmable
- Transmission of process value and parametrization via IO-link

## Wiring diagram

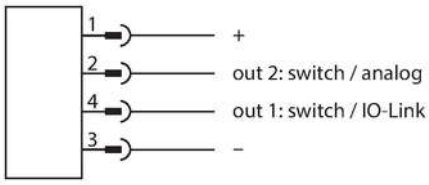


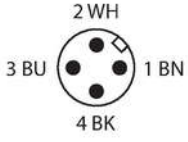


## Functional principle

Ultrasonic sensors capture a multitude of objects contactlessly and wear-free with ultrasonic waves. It does not matter whether the object is transparent or opaque, metallic or non-metallic, firm, liquid or powdery. Even

LUS211-40-34-LI2UPN8-H1141| 20-01-2021 14-02 | Technical modifications reserved

## Technical data

| | |
|---|---|
| Voltage output | 0…10 V |
| Load resistance voltage output | ≥ 8 kΩ |
| Switching frequency | ≤ 5 Hz |
| Hysteresis | ≤ 50 mm |
| Voltage drop at $I_e$ | ≤ 2.5 V |
| Short-circuit protection | yes |
| Reverse polarity protection | yes |
| Setting option | Capacitive Sensor<br>IO-Link |
| **IO-Link** | |
| IO-Link specification | V 1.1 |
| IO-Link port type | Class A |
| Communication mode | COM 2 (38.4 kBaud) |
| Process data width | 32 bit |
| Measured value information | 15 bit |
| Switchpoint information | 4 bit |
| Frame type | 2.2 |
| Minimum cycle time | 5 ms |
| Function Pin 4 | IO-Link |
| Function Pin 2 | DI |
| Maximum cable length | 20 m |
| Profile support | Smart Sensor Profil |
| Included in the SIDI GSDML | Yes |
| **Mechanical data** | |
| Design | Smooth barrel, LUS |
| Radiation direction | straight |
| Dimensions | Ø 38 x 127.1 mm |
| Housing material | Stainless-steel/Plastic, 1.4404 (AISI 316L)/Grilamid TR90 UV<br>PA |
| Transducer material | Plastic, Epoxyd resin and PU foam |
| Electrical connection | Connectors, M12 × 1, 4-wire |
| Process connection | 3/4" NPT |
| Ambient temperature | -25…+70 °C |
| Protection class | IP67<br>IP69K |
| | Not assessed by UL |
| **Tests/approvals** | |
| Declaration of conformity EN ISO/IEC | EN 60947-5-7 |

environmental conditions such as spray, dust or rain hardly affect their function.
The sonic cone diagram indicates the detection range of the sensor. In accordance with standard EN 60947-5-7, quadratic targets in a range of sizes (20 × 20 mm, 100 × 100 mm) and a round rod with a diameter of 27 mm are used.
Important: The detection ranges for other targets may differ from those for standard targets due to the different reflection properties and geometries.

## Sonic Cone

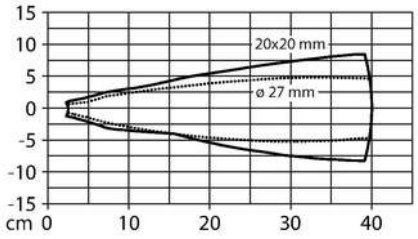


LUS211-40-34-LI2UPN8-H1141| 20-01-2021 14-02 | Technical modifications reserved

## Mounting instructions

| Mounting instructions/Description |
| --- |

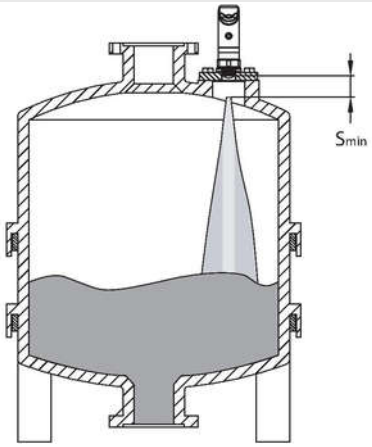


LUS211-40-34-LI2UPN8-H1141| 20-01-2021 14-02 | Technical modifications reserved

## Accessories

| Dimension drawing | Type | Ident. no. | |
|---|---|---|---|
|  | RKC4.4T-2/TEL | 6625013 | Connection cable, female M12, straight, 4-pin, cable length: 2 m, sheath material: PVC, black; cULus approval; other cable lengths and qualities available, see www.turck.com |
| 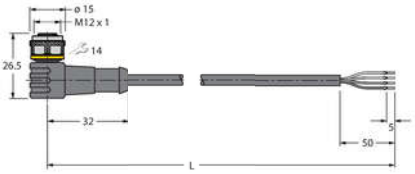 | WKC4.4T-2/TEL | 6625025 | Connection cable, female M12, angled, 4-pin, cable length: 2 m, sheath material: PVC, black; cULus approval; other cable lengths and qualities available, see www.turck.com |
| 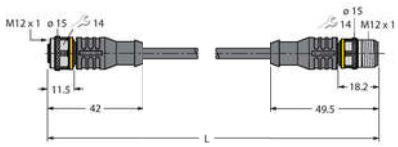 | RKC4.4T-2-RSC4.4T/TEL | 6625208 | Connection cable, M12 female plug, straight, 4-pin, cable length: 2 m, sheath material: PVC, black; cULus approval; other cable lengths and qualities available, see www.turck.com |

## Accessories

| Dimension drawing | Type | Ident. no. | |
|---|---|---|---|
| | USB-2-IOL-0002 | 6825482 | IO-Link Master with integrated USB port |

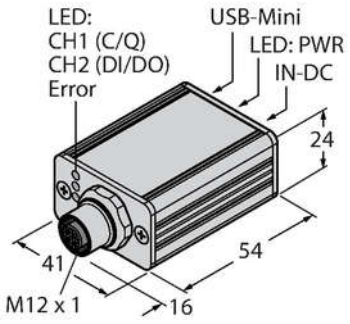


LUS211-40-34-LI2UPN8-H1141| 20-01-2021 14-02 | Technical modifications reserved

| Dimension drawing | Type | Ident. no. | |
|---|---|---|---|
| 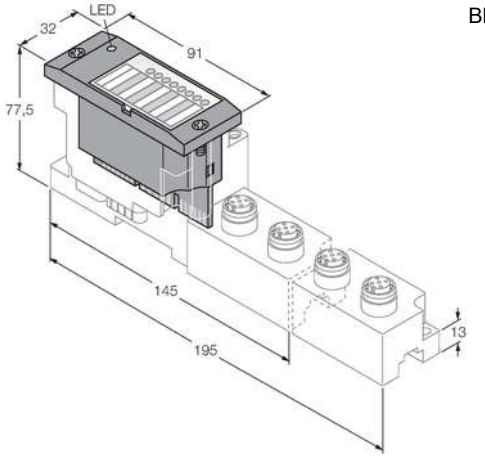 | BL67-4IOL | 6827386 | 4-channel IO-Link Master module for the modular BL67 I/O-system |
| 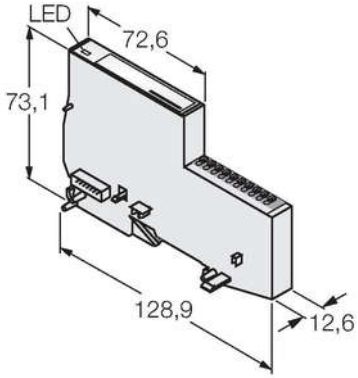 | BL20-E-4IOL | 6827385 | IO-Link master module for the modular BL20 I/O system, 4-channel |
| 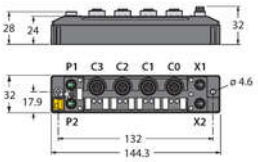 | TBEN-S2-4IOL | 6814024 | Compact multiprotocol I/O module, 4 IO-Link Master 1.1 Class A, 4 universal PNP digital channels 0.5 A |
| 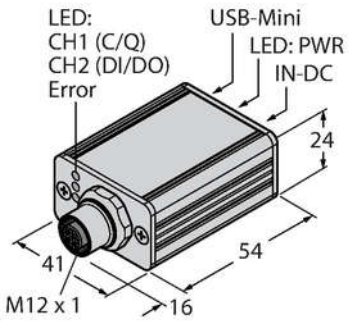 | USB-2-IOL-0002/D845 | Kopie von 6825482 | IO-Link Master with integrated USB port |

LUS211-40-34-LI2UPN8-H1141| 20-01-2021 14-02 | Technical modifications reserved