Heavy-Duty / Flash/Multi-Tone Sounder 439

Flash/Sounder WM 32 tne 115-230VAC RD/RD



Part No.: 439.010.68

MECHANICAL DATA	
Length	138 mm
Width	136 mm
Height	119 mm
Materials	ABS PC
Dome colour	Red
Housing colour	Red
Protection category	IP66
Connection	Screw terminals
cross-sectional area minimum	0,25mm² / 24AWG
cross-sectional area maximum	1,50mm² / 16AWG
Cable entry	Screwed cable gland
Cable entry minimum	d = 8 mm
Cable entry maximum	d = 12 mm
Tension relief	Present (conforms to VDE)
Type of fixing	Wall mounting
Working temperature minimum	-25°C
Working temperature maximum	+70°C
Weight with packaging	510 g
Product weight	429 g

ELECTRICAL DATA	
Operating voltage	115-230V
Operating voltage type	AC
Operating voltage frequency	50Hz at 230V 60Hz at 115V
Operating voltage tolerance	+/- 10%
Rated operational voltage	230 VAC
Rated operational current	30 mA
Protection class	Protection class 2
Pollution degree	3
Overvoltage category	II
Isolation voltage	Ui = 250V; Uimp = 2.500V

OPTICAL DATA	
Light source	Xenon
Light colour	Red
Optical signal image	Flash
Flash frequency	1 Hz

! For additional installation and mounting information, refer to the appropriate user guide at www.werma.com. This printed copy is for information only and is subject to alteration.

Heavy-Duty / Flash/Multi-Tone Sounder 439

Flash/Sounder WM 32 tne 115-230VAC RD/RD

Flash output	2 J
Service life optical	50,000 h maximum

ACUSTICAL DATA	
Volume (max) at 1m distance	105,0 dB (A)
Acoustic signal image	Multi-tone
Number of tones	32 tone
Acoustic service life	5,000 h minimum

APPROVAL DATA	
Conforms with CE	Yes
WEEE	No
Conforms with ATEX-directive	No
Conforms with CCC	No
Conforms with UL	No
Conforms with FCC	No
Conforms with IC	No
EAC certificate available	Yes
Conforms with AS-I	No
ICAO Certification	No
Conforms with DNV	No
Conforms with RoHS CN	No
Conforms with VdS	No

! For additional installation and mounting information, refer to the appropriate user guide at www.werma.com. This printed copy is for information only and is subject to alteration.

Heavy-Duty / Flash/Multi-Tone Sounder 439

Flash/Sounder WM 32 tne 115-230VAC RD/RD

DRAWING

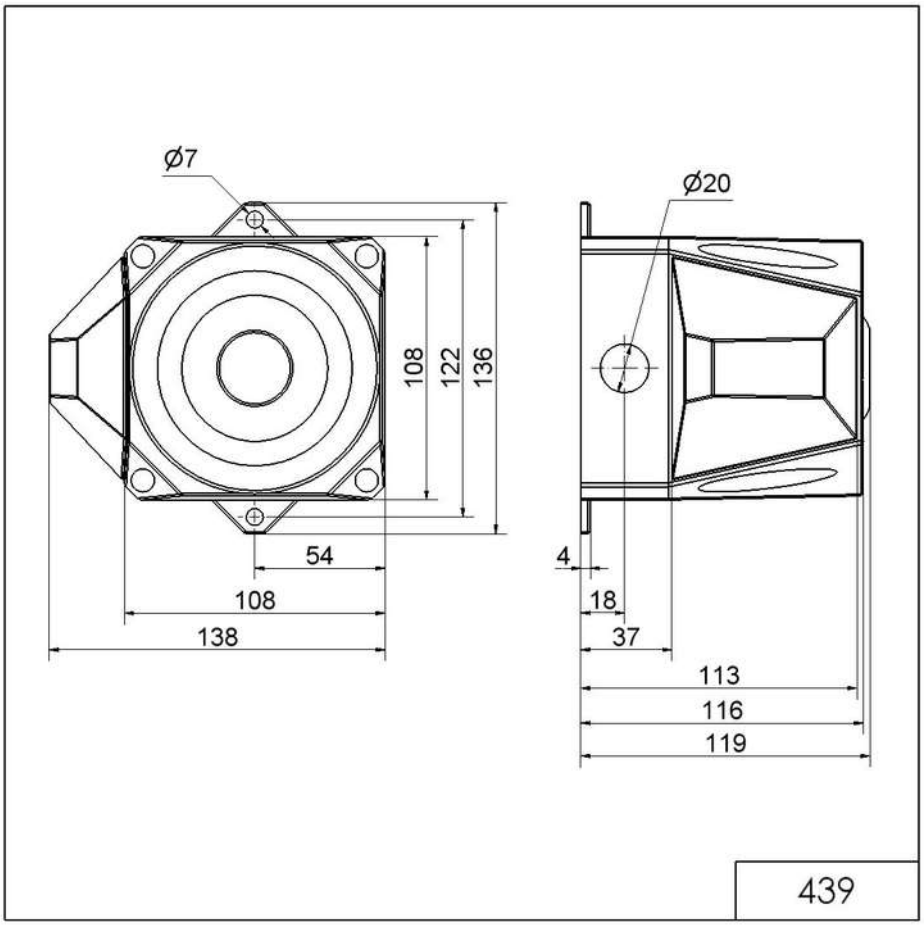

! For additional installation and mounting information, refer to the appropriate user guide at www.werma.com. This printed copy is for information only and is subject to alteration.