Pulse counters, electromechanical

Standard counters | 4 digits with reset (AC+DC) | Bk14



The standard totalizers Bk14 (with manual reset) boast a robust construction despite their small size.

They are ideal for use in harsh industrial environments.

Characteristics

- 4-digit totalizer with manual reset.

Benefits

- Very long service life (200 million pulses).

Applications

General quantity counting, time, charge and performance metering.

Type series

Description		*Type*	*Order information*
Panel mount with 2 mounting holes	4 digits with reset	**Bk14.11**	· Art. no. · At different voltages, please give type, voltage, kind of voltage and series e.g.: Bk14.21, 12 V AC, type a
Panel mount for clip mounting	4 digits with reset	**Bk14.21**	

Technical data

Electrical connection		tinned round pins ø 1.6 mm [0.063"] with push on connectors
Rated voltage	type 0/I/a	12 / 24 / 48 / 115 / 230 V DC ±10 % 24 / 48 / 115 / 230 V AC ±10 %
Color of counter		grey
Height of figures		approx. 2 x 4 mm [0.079 x 0.16"]
Color of figures		white on black
Counting mechanism shaft		stainless steel
Relative humidity at +30 °C [+86 °F]		≤ 80 % (non-condensing)
Altitude		up to 2000 m [6562']
Mounting position		any
Operating life		approx. 200 x 10^6 pulses
Protection		IP40 (front side)
Weight		70 g [2.47 oz]
Test voltage		2000 V ~ effective, acc. to VDE 0435
Vibration resistance	3 g 6 g 10 g	up to 10 Hz up to 15 Hz independent of position 20 - 300 Hz
Device safety	designed to protection class application area	EN 61010 part 1 2 pollution level 2

Options

- key locking reset special key (order code"vs", e.g. Bk14.11 vs)
- housing color black
- higher counting speed
- also with flying leads

Approvals

CE compliant in accordance with

EMC Directive	2014/30/EU
RoHS Directive	2011/65/EU
Low Voltage Directive	2014/35/EU

Connection diagram

type 0 a.1, DC

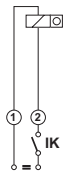

IK = Pulse contact

type a, AC

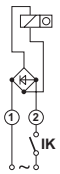

© Fritz Kübler GmbH, subject to errors and changes. 11/2023

Standard counters | 4 digits with reset (AC+DC) | Bk14

Type / Counting mechanism

Voltage	Type	Pulse frequency max.	Pulse on time min.	Pulse interval min.	Pulse ratio	On-time	Power consump. approx.	Permi. residual ripple max.	Operating temp. (non-condensing)
V DC	0	10 Hz	60 ms	40 ms	3 : 2	100 %	1 W	48 %	-10 °C ... +60 °C [+14 °F ... +140 °F]
V DC	1	25 Hz	24 ms	16 ms	3 : 2	100 %	2 W	48 %	-10 °C ... +60 °C [+14 °F ... +140 °F]
V AC	a	18 Hz	22.2 ms	33.3 ms	2 : 3	100 %	2.9 VA	–	-10 °C ... +55 °C [+14 °F ... +131 °F]

Panel mount with 2 mounting holes
4 digits, with reset
Type Bk14.11



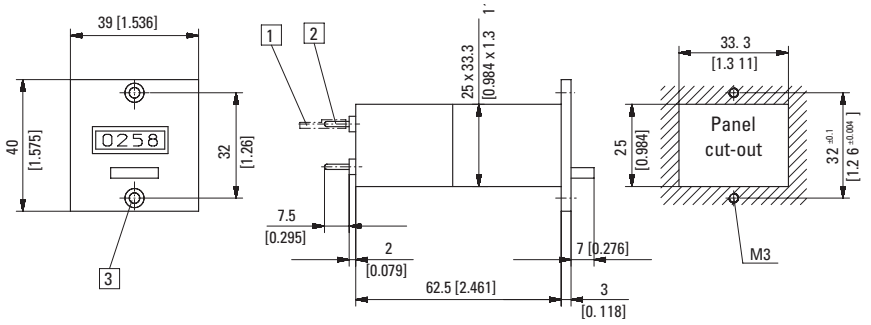

1 Push on connector ø 1.5 [0.059], tinned 2 Round pin ø 1.6 [0.063], tinned 3 Countersinking Af3 DIN 74

Type	Voltage	Display	Art. no. 12 V	24 V	115 V	230 V	
Bk14.11	DC (10 Hz) / 0	4 digits	**1.180.110.012**	**1.180.110.013** [1)]			
	DC (25 Hz) / 1		**1.180.110.032**	**1.180.110.033**			
	AC (18 Hz) / a			**1.180.110.061**	**1.180.110.064**	**1.180.110.066**	

Panel mount for clip mounting
4 digits, with reset
Type Bk14.21



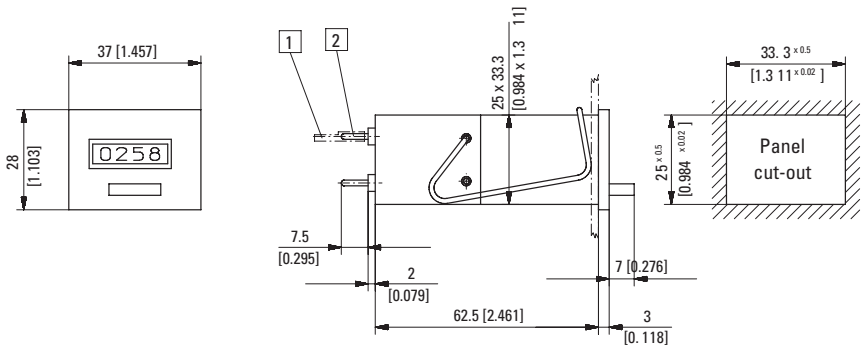

1 Push on connector ø 1.5 [0.059], tinned 2 Round pin ø 1.6 [0.063], tinned

Type	Voltage	Display	Art. no. 12 V	24 V	115 V	230 V	
Bk14.21	DC (10 Hz) / 0	4 digits	**1.180.210.012**	**1.180.210.013**			
	DC (25 Hz) / 1		**1.180.210.032**	**1.180.210.033**			
	AC (18 Hz) / a			**1.180.210.061**	**1.180.210.064**	**1.180.210.066**	

Dimensions in mm [inch]

1) Stock types.

© Fritz Kübler GmbH, subject to errors and changes. 11/2023