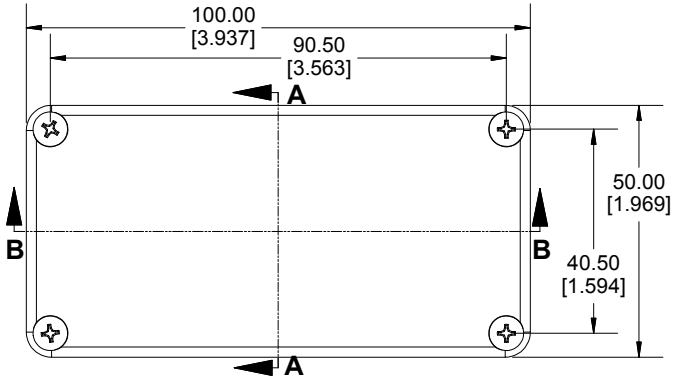

TOP VIEW

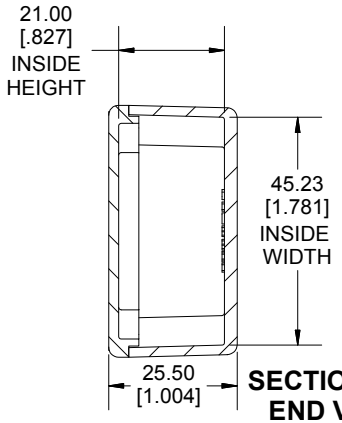

SECTION A-A
END VIEW

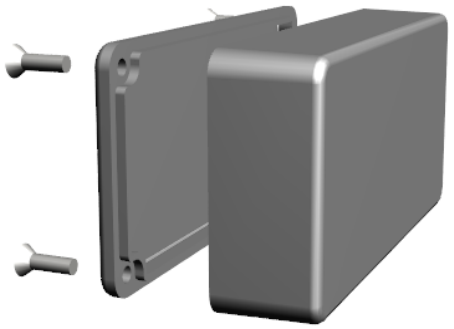

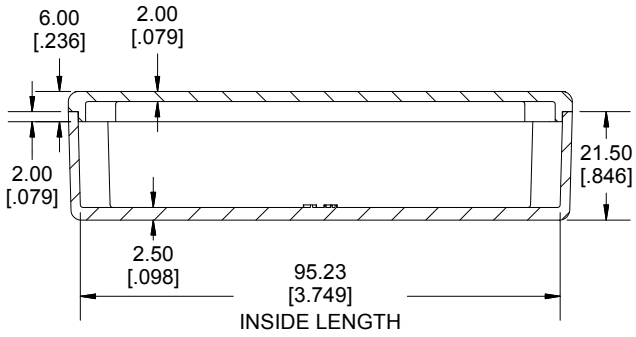

SECTION B-B
SIDE VIEW

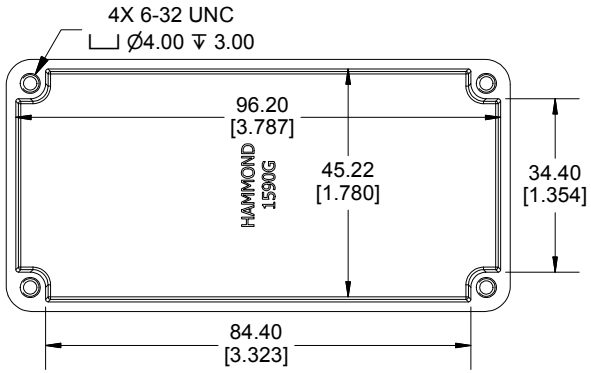

INSIDE BOX

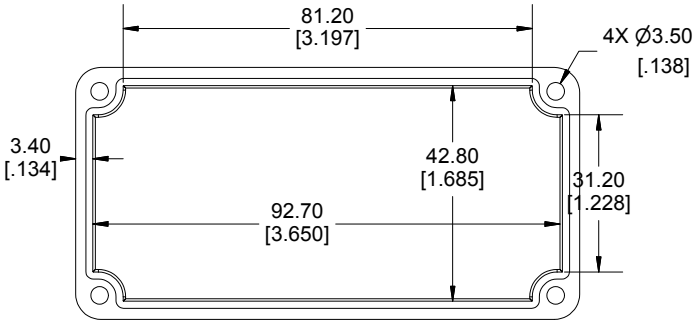

INSIDE LID

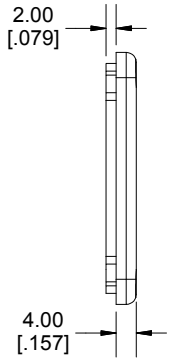

Enclosures can be Factory Modified (Milling, Drilling, Printing etc.)
Contact Factory mjm@hammondmfg.com for quotes
Solid models of this enclosure available in STEP or IGES.
(Part number and text placement/orientation on our products are subject to change, we do not recommend using them as a locating reference for modification purposes)

NOTE
Purchased assembly includes box, lid and 4 cover screws.
Box and lid are made from Diecast Aluminum Alloy.
Silicone Gasket supplied with liquid resistant enclosure.
Recommended Torque: 50-55 cN.m [71-78 ozf.in]
Recommended Torque with Gasket : 25-30 cN.m [36-43 ozf.in]

PART NUMBERS	
1590G Enclosure	
Natural Finish Enclosure	1590G
Black Textured Enclosure	1590GBK
1590G Liquid Resistant Enclosure (Silicone Gasket)	
Natural Finish Enclosure	1590WG
Black Textured Enclosure	1590WGBK
ACCESSORIES	
Liquid Resistant Cover Screws	
Stainless Steel Cover Screws (Pkg 100) [6-32 x 1/2" With O-Ring]	1590WMS100
Black Stainless Steel Cover Screws (Pkg 100) [6-32 x 1/2" With O-Ring]	1590WMS100BK
Standard Cover Screws	
Plated Cover Screws (Pkg 100) [6-32 x 1/2"]	1590MS100
Black Cover Screws (Pkg 100) [6-32 x 1/2"]	1590MS100BK

Dimensions:
mm
[inches]

HAMMOND MANUFACTURING®

1590G

www.hammondmfg.com