

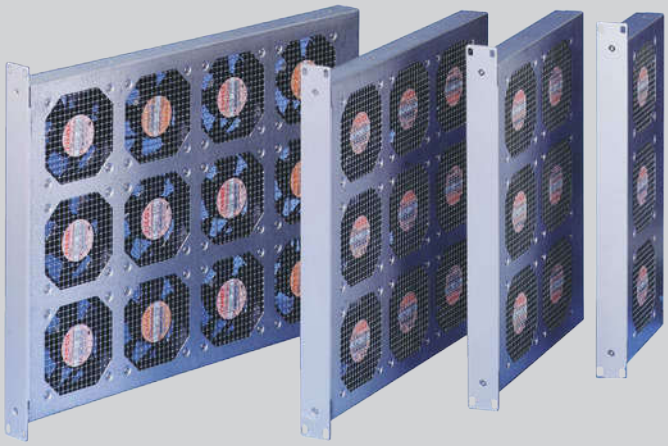



CONNECT AND PROTECT

Climate Control

01/2023

nVent

SCHROFF

Climate control

OVERVIEW

MAIN KATALOG

Cabinets 1

Wall mounted cases 2

Accessories for cabinets and wall mounted cases . . 3

Climate control . . 4

Electronics cases 5

Subracks/ 19" chassis 6

Front panels, plug-in units 7

Systems 8

Power supply units 9

Backplanes 10

Connectors, front panel component system 11

Appendix 12

19" FANS

- Pusher fans
- Circulation fans
- Cooling capacity up to 2000 W





AIR FILTERED FANS

- Simple to fit - just clips in
- Protection type up to IP 55
- Airflow volume up to 770 m^3/h

ACCESSORIES

- Heaters
- Speed control
- Thermostats
- Hygrostats



36108005 (01192002, 01192009, 01194003, 01108012 00902001 00908001)

AIR/WATER HEAT EXCHANGERS

- Complete cabinet solutions
- For industry and data centers
- Cooling capacities up to 40 kW





Overview **4.0**

Cooling concepts. 4.2

19" fan trays ... 4.4

Air filtered fans 4.20

Accessories
Heaters 4.56
Fans 4.59
Speed control 4.60
Thermostats 4.61
Hygrostats 4.64

Air/water heat exchangers 1.224

36108006 (01108004 01108002 01102004 00505033 01008020 01006040)

Climate control – Service

PRODUCTS / COOLING CONCEPTS

Product	Closed cabinet	Raised cover, ventilation slots	Perforated doors	19" circulation fan, top cover fan
	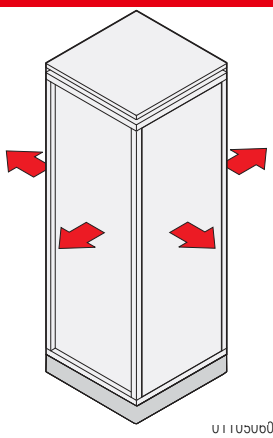	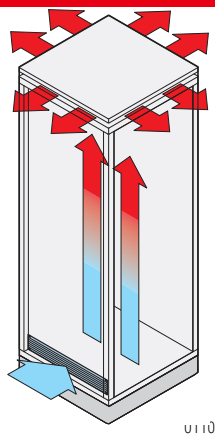	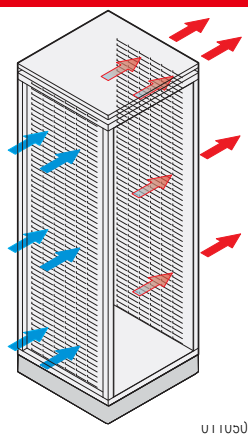	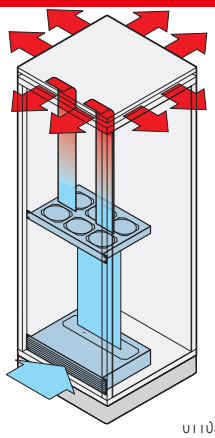
Description	Natural convection through thermal radiation	Free convection through top opening	Free convection through openings in doors/rear panels	Cooling with air
Type of protection	≤ IP 55	≤ IP 20	≤ IP 20	≤ IP 20
Noise level approx.	0	0	55 ... 65 dB(A)	34 ... 67 dB(A)
Environmental conditions	$T_i > T_a$	$T_i > T_a$	$T_i > T_a$	$T_i > T_a$
Cooling capacity approx. [1]	< 500 W	500 W ... 800 W	500 W ... 6000 W [2]	< 2000 W

1) depending on cabinet size, electronic components, location and room cooling concept
2) > 800 W are only possible with own, active cooling through components like servers, etc.
T_i = cabinet inner temperature T_a = cabinet ambient temperature

THERMAL SIMULATION

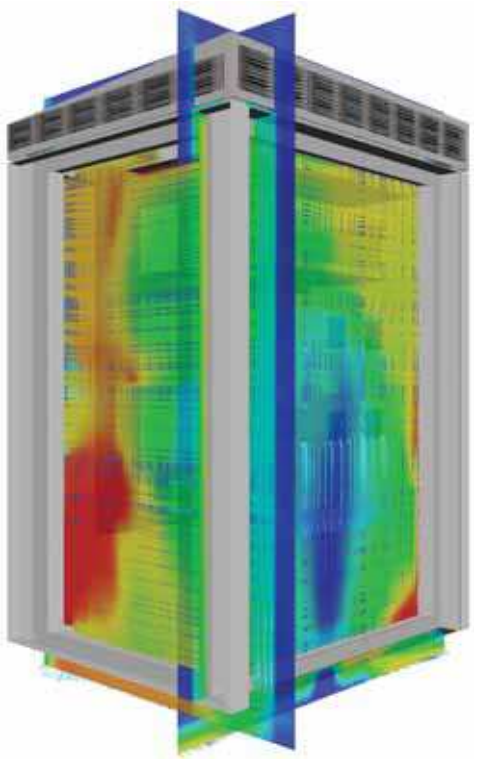

01103050

Project support through state-of-the-art simulation technology
As the packing density and integration density of components increases, the transport of waste heat rapidly becomes more difficult. Analyzing heat transport through thermal paste, flow and heat radiation makes it possible to identify hot spots as early as the design phase. We use state-of-the-art numerical analyses and simulation methods to accomplish this. This allows the analysis and optimization of cooling concepts for anything from an assembly to an entire cabinet system at the preliminary stage. Our cooling specialists would be happy to assist you in finding the right cooling concept for your project

Your advantage:

- Analyzing in detail to eliminate thermal problems at the preliminary stage
- Ensuring the high efficiency and reliability of your systems
- Reducing the number of expensive prototypes and tests
- Reducing expenses and development costs

Climate control – Service

PRODUCTS/COOLING CONCEPTS

Product	Air filtered fans	Air conditioners	Air/water heat exchanger (LHX 3)	Air/water heat exchanger (LHX 20/40)
	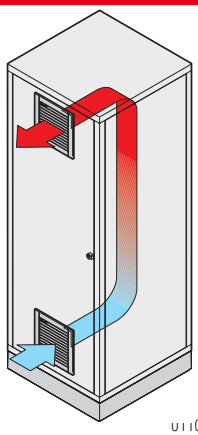	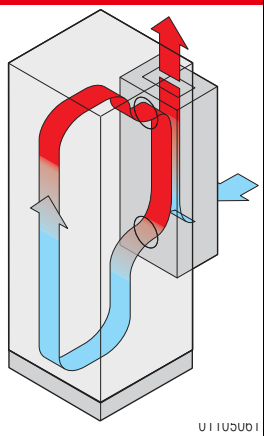	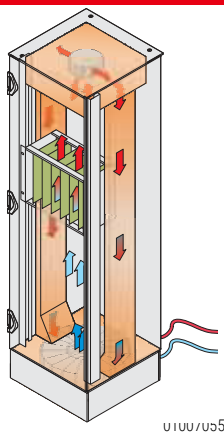	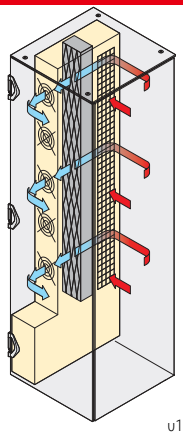
Description	Cooling with air	Cooling with coolant	Cooling with water	Cooling with water
Type of protection	≤ IP 55	≥ IP 55	≥ IP 55	≥ IP 55
Noise level	39 ... 71 dB(A)	60 ... 81 dB(A)	45.2 dB(A)	50 ... 70 dB(A)
Environmental conditions	$T_i > T_a$	$T_a \leq 55$ °C	$T_a \leq 70$ °C	$T_a \leq 70$ °C
Cooling capacity approx. 1)	< 1500 W	< 17000 W	< 3000 W	< 40000 W

1) depending on cabinet size, electronic components, location and room cooling concept
T_i = cabinet inner temperature T_a = cabinet ambient temperature

OPTIMAL TEST EQUIPMENT



01112001

Climate bay testing

Being part of the Pentair group, Schroff and McLean look back on 50 years of experience and are reknown around the world for their expertise in efficient cooling of industrial facilities and equipment.

Based on our own laboratory test chambers with the most modern equipement in Europe, America and Asia:

- Walk-in climate chamber to test and optimize completely integrated cabinets and systems under different conditions
- Smaller climate chambers to test components
- Airflow and air resistance measurements in a wind tunnel
- Noise level measurements
- Tests in accordance with DIN EN 60529 to determine the type of protection (IP)

Outstanding standard products, flexible custom solutions, global technical support and service add up to a 'cool' combination!

Part number in bold face type: ready for despatch within 2 working days
Part number in normal type: ready for despatch within 10 working days

Climate control – 19" fan trays

OVERVIEW

MAIN KATALOG

Cabinets 1

Wall mounted cases 2

Accessories for cabinets and wall mounted cases . . 3

Climate control . . 4

Electronics cases 5

Subracks/ 19" chassis 6

Front panels, plug-in units 7

Systems 8

Power supply units 9

Backplanes 10

Connectors, front panel component system 11

Appendix 12

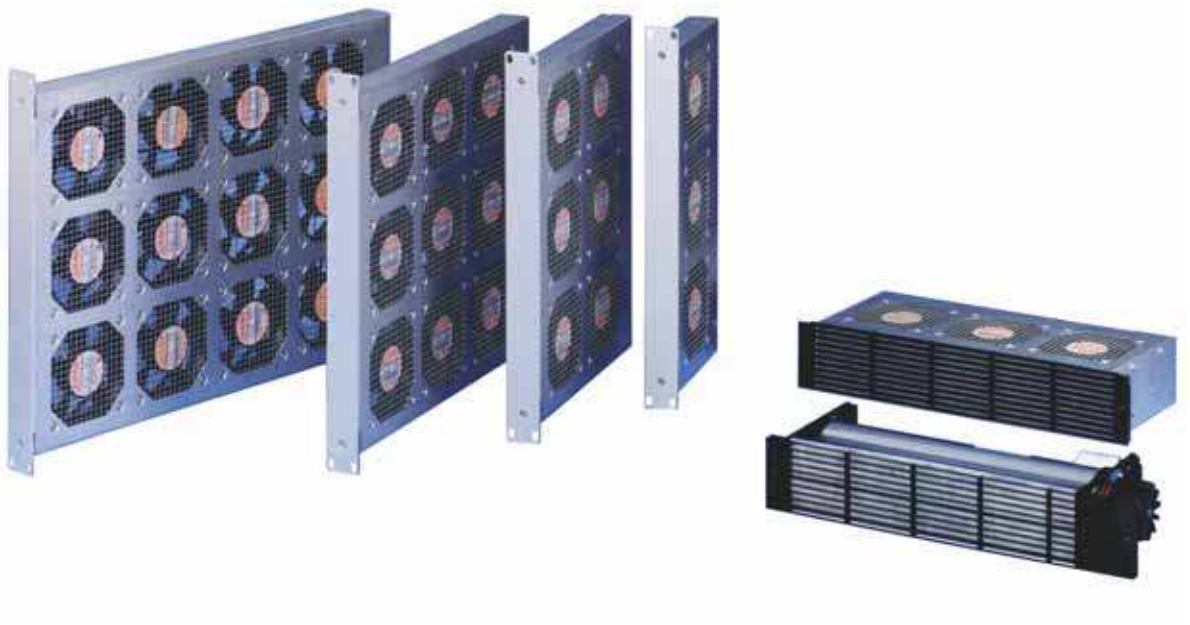

01102012

STANDARDS/APPROVALS

- 19" assembly area in accordance with: IEC 60297-3-101
- Mechanical protection to DIN EN ISO 13857
  Contact protection to DIN EN ISO 13857
  Electrical safety to EN 60335 part 1
  Plastics self-extinguishing to UL 94 V0

AIRFLOW

VERTICAL AIRFLOW (CONTINUAL WARMING)

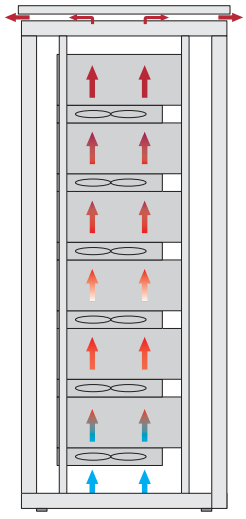

01109055

With vertical airflow the air becomes steadily warmer as it rises through the cabinet.

DIVERTED AIRFLOW (EFFECTIVE COOLING)

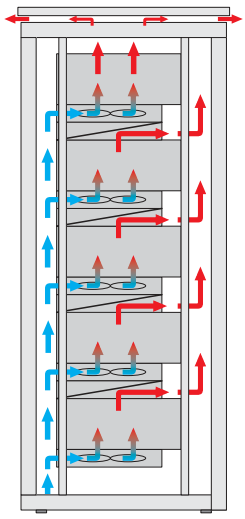

01109054

By using the 1 U airflow element, air is introduced from the front and extracted to the rear. Now all sub-assemblies receive the same cooling air.

Climate control – 19" fan trays

OVERVIEW

19" FAN TRAYS

- **To cool single components and assemblies in 19" cabinets**
- **High airflow rate for directed heat removal**
- **With axial or radial fans**
- **For voltages 230 V_{AC}, 115 V_{AC} or 24 V_{DC}**
- **CE- approvals**



01194003

19" FANS

- 19" circulation fan, height 1 U
- 230 V_{AC}, 115 V_{AC} and 24 V_{DC}
- Up to 1000 m^3/h
- With/without mains switch or with temperature-dependent speed control



01192009

19" PUSHER FANS

- Tangential fan, height 2 U
- 230 V_{AC} and 115 V_{AC}
- Up to 320 m^3/h



01194005

- 19" pusher fan, height 2 U
- 230 V_{AC} and 115 V_{AC}
- Up to 530 m^3/h



01102017

- 19" pusher fan, height 3 U
- 230 V_{AC} and 115 V_{AC}
- Up to 570 m^3/h
- Variable air outlet with/without pipe connection, upward or to rear

SERVICEPLUS

e.g. other airflow capacities
e.g. supply voltages
e.g. other dimensions
e.g. custom solutions

Overview **4.4**

19" fans
1 U with/without front switch **4.6**
1 U speed-controlled and monitored **4.8**

19" blower units
Pusher fan, 2 U with tangential blower . . **4.9**

Pressure fan, 2 U, (160, 220 mm deep) **4.10**

Pusher fan, 3 U. . . **4.12**

ServicePLUS configuration **4.14**

Accessories
19" airf **4.15**
AC fans **4.16**
DC fans **4.16**

Climate control – 19" fan trays

19" FAN 1 U



01194002

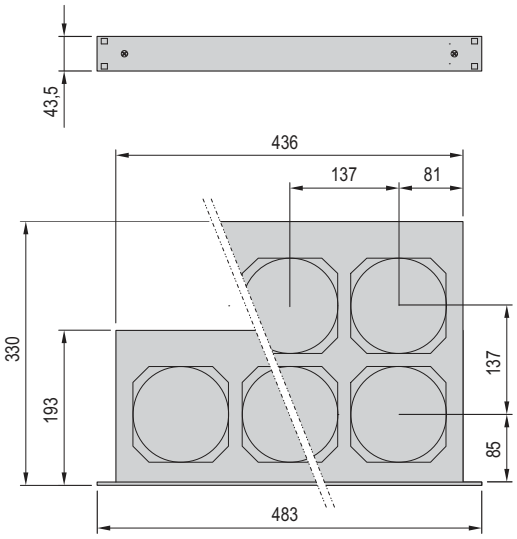

KTA44306

- Mechanical strain relief for mains cables
- Can be adapted to subracks
- Contact protection in accordance with DIN EN ISO 13857

CE

DELIVERY COMPRISES (ready to connect)

Item	Qty	Description
1	1	19" circulation fan, 1 U, cover/base plate, St, 1 mm, finish AlZn, with perforation; front panel 1 U, Al, 3 mm, anodised
2	3 / 6	Fan, see Order Information
3a	1	AC with IEC connector (mains input IEC 60320), incl. safety clamp for mechanical strain relief
b3	1	DC version with connecting cable, cable length 2.5 m

ORDER INFORMATION

	24 V_{DC} Part no.	115 V_{AC} Part no.	230 V_{AC} Part no.
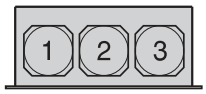 KTA44857	**10713-103**	**10713-102**	**10713-100**
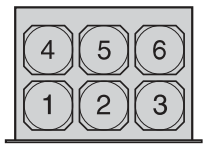 KTA44858	**10713-107**	**10713-106**	**10713-104**
Replacement fan 1 piece	**20713-240**	**20713-244**	**20713-243**
Side panel connecting bracket between europacPRO subrack and fan, including fixing material kit, PU 4 pieces			**21101-954**
Equipment cable SCHUKO/UTE SCHUKO/UTE plug, IEC 60320 C13 socket, 2.5 m, 1 piece			**60103-131**
Equipment cable, BS British Standard plug, IEC 60320 C13 socket, 2.5 m, 1 piece			**60103-137**
Equipment cable, USA USA plug, IEC 60320 socket, 2 m, 1 piece			**60103-141**

TECHNICAL DATA

Voltage	230 V_{AC}		115 V_{AC}		24 VC_{DC}
Frequency in Hz	50	60	50	60	-
Number of fans	3/6		3/6		3/6
Airflow volume in m^3/h (3/6 fans)	440/845	520/1000	440/845	520/1000	506/970
Noise level in dB(A) (3/6 fans)	56.5/59.4	60.2/62.9	56.5/59.4	60.2/62.9	60.5/63.3
Power consumption in W (3/6 fans)	45/90	42/84	46.5/93	43.5/87	24/48
Max. stat. pressure in Pa	73	88	73	88	68
Permissible ambient temperature in °C	−40 ... +70 °C				
Lifespan in h L_{10}40 °C	43500				
Lifespan in h L_{10}55 °C	20000				

NOTE

- Fan dimensioning see page 4.18
- Replacement fans see chapter Climate control - Accessories
- Versions with multiple fans see ServicePLUS configuration page 4.14

Climate control – 19" fan trays

19" FAN 1 U WITH FRONT SWITCH



01194003



01197002

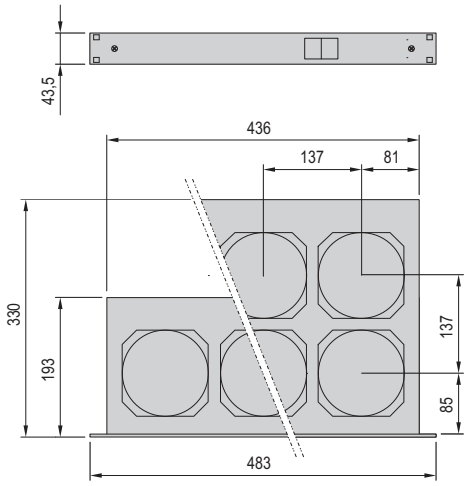

KTA45963

- Front-mounted illuminated mains switch on AC devices, coupled with additional rear mains outlet; mechanical strain relief for mains input and mains output cables
- Can be adapted to subracks
- Contact protection in accordance with DIN EN ISO 13857

CE

DELIVERY COMPRISES (ready to connect)

Item	Qty	Description
1	1	19" circulation fan, 1 U, top/base plate, St, 1 mm, finish AlZn, with perforation; front panel 1 U, Al, 3 mm, anodised
2	3 / 6	Fan, see Order Information
3a	1	AC version with mains switch, illuminated green; plug (mains input IEC 60320) incl. safety clamp for mechanical strain relief; coupled mains output socket (IEC 60320)
b3	1	DC version with mains switch and connecting cable, cable length 2.5 m

ORDER INFORMATION

	24 V_{DC} Part no.	115 V_{AC} Part no.	230 V_{AC} Part no.
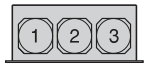 KTA44857	**10713-111**	**10713-110**	**10713-108**
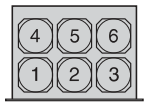 KTA44858	**10713-115**	**10713-114**	**10713-112**
Replacement fan 1 piece	**20713-240**	**20713-244**	**20713-243**
Side panel connecting bracket between europacPRO subrack and fan, including fixing material kit, PU 4 pieces			**21101-954**
Equipment cable SCHUKO/UTE SCHUKO/UTE plug, IEC 60320 C13 socket, 2.5 m, 1 piece			**60103-131**
Equipment cable, BS British Standard plug, IEC 60320 C13 socket, 2.5 m, 1 piece			**60103-137**
Equipment cable, USA USA plug, IEC 60320 socket, 2 m, 1 piece			**60103-141**
Mains cable, IEC IEC 60320 C14 plug, IEC 60320 C13 socket, 2.5 m, 1 piece			**60197-053**

TECHNICAL DATA

Voltage	230 VAC		115 VAC		24 VDC
Frequency in Hz	50	60	50	60	-
Number of fans	3/6		3/6		3/6
Airflow volume in m^3/h (3/6 fans)	440/845	520/1000	440/845	520/1000	506/970
Noise level in dB(A) (3/6 fans)	56.5/59.4	60.2/62.9	56.5/59.4	60.2/62.9	60.5/63.3
Power consumption in W (3/6 fans)	45/90	42/84	46.5/93	43.5/87	24/48
Max. stat. pressure in Pa	73	88	73	88	68
Permissible ambient temperature in °C	−40 ... +70 °C				
Lifespan in h L_{10}40 °C	43500				
Lifespan in h L_{10}55 °C	20000				

- Fan dimensioning, see page 4.18
- Replacement fans, see chapter Climate control - Accessories
- Versions with multiple fans see ServicePLUS configuration page 4.14

Part number in bold face type: ready for despatch within 2 working days
Part number in normal type: ready for despatch within 10 working days

Climate control – 19" fan trays

19" FAN 1 U, WITH SPEED CONTROL AND FUNCTION MONITORING



01198001

Photo shows 19" fan unit with 3 fans, without switch

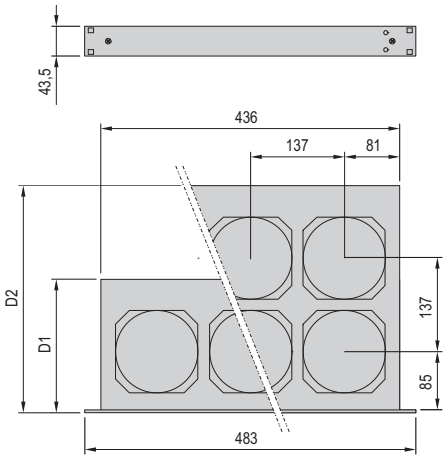

01107050

Airflow capacity with one fan

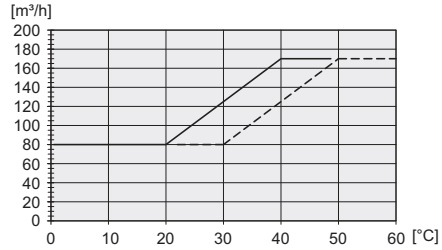

01112050

Monitoring signal

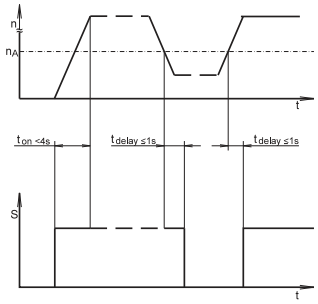

kta43400

n = rotating speed, S = signal, n_A = speed threshold value "Alarm"

- Low noise through temperature dependent airflow volume
- Range selectable: 20 ... 40 °C and 30 ... 50 °C
- External sensor, at sensor breakage max speed will be set automatically
- Function control with LEDs and via potential-free contact
- Contact protection in accordance with DIN EN ISO 13857
- 2 versions, 24 V_{DC} or 230 V_{AC}

CE

DELIVERY COMPRISES (ready for connection)

Item	Qty	Description
1	1	19" circulation fan, 1 U; cover/base plate, St, 1 mm, finish Al-Zn, with perforation front panel 1 U, Al, 3 mm, anodised
2	3 / 6	DC fan, see Order information
3	1	Connecting cable, length 2.5 m, open-ended
4	1	Temperature sensor for speed control, NTC resistor, cable length 1.5 m

ORDER INFORMATION

	24 V_{DC} D mm	Without switch Part No.	230 V_{AC} D mm	With switch Part No.	Without switch Part No.
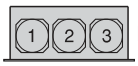 KTA44857 D1	193	**10713-099**	250	19713-121	–
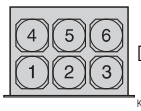 KTA44858 D2	330	**10713-098**	397	–	**19713-006**

Accessories	
Filter mat, class G 2 for 3 fans, PU 3 pieces	**60713-169**
Filter mat, class G 2 for 6 fans, PU 3 pieces	**60713-170**

TECHNICAL DATA

Voltage AC version (fans 24 V_{DC}) / **Voltage DC version**	86 ... 260 V_{AC} / 24 V_{DC} (21 ... 27)	
Number of fans	3	6
Max. airflow volume in m^3/h	467	895
Noise level in dB(A)	63.5	66.4
Max. stat. pressure in Pa	70	70
Power consumption in W	15.9	31.8 W
Permissible ambient temperature °C	–20 ... +65 °C	
Life in h L_{10}40 °C	70000	

Technical data Regulation/monitoring

Control range	Changeover switch between 20 ... 40 °C and 30 ... 50 °C
Sensor	External NTC resistor, cable length 1.5 m
Sensor connector	Rear-mounted plug contact, max. rotation speed in case of sensor breakage
Signal at	Speed < 30 % nominal speed; switch-on delay < 4 s, signal delay < 1 s (see monitoring signal)
Signalling	Display via LEDs; potential-free contact (changeover), switching capacity 5 W, max. switching voltage 170 V, open collector on request

- Fan dimensioning see page 4.18

Climate control – 19" fan trays

PUSHER FAN, 2 U, WITH TANGENTIAL FAN



01192009

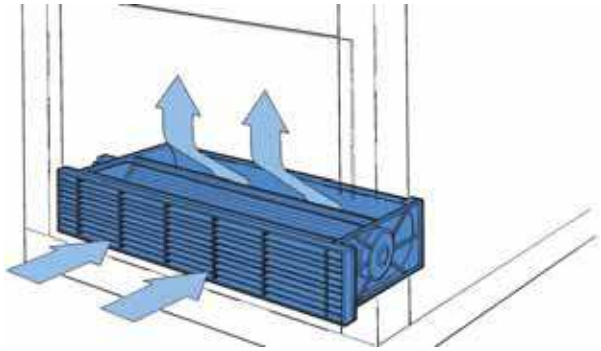

A3532

- High airflow volume
- Integrated filter mat
- 2 versions:
  - LE1: 19" bolt-on dimension, fan unit is wider than 19"
  - LE2: 19" reduced width, for easy assembly

DELIVERY COMPRISES (ready to connect)

Item	Qty	Description
1	1	Blower unit 2 U, with grille, PA 6.6, UL 94 V-0, front grille 2 U, PPO, UL 94 V-0; filter mat, synthetic fibre, filter class G 2
2	1	Fan
3	1	Terminal block

ORDER INFORMATION

Description	115 V_{AC} Part no.	230 V_{AC} Part no.
LE1: Pusher fan 2 U, tangential blower	**60713-003**	**60713-001**
LE2: Pusher fan 2 U, tangential blower	**60713-004**	**60713-002**
Spare filter mat PU 10 pieces		**20705-008**

DIMENSIONS

Voltage	115 V_{AC}		230 V_{AC}	
Frequency in Hz	50	60	50	60
Airflow volume in m^3/h	320	330	320	330
Noise level in dB(A)	59	62	59	62
Max. stat. pressure in Pa	65	70	65	70
Power consumption in W	30	40	37	46
Permissible ambient temperature in °C	−20 ... +65 °C			
Lifespan in h	30000			

NOTE

- 24 V_{DC} on request
- Fan dimensioning, see page 4.18

LE 1

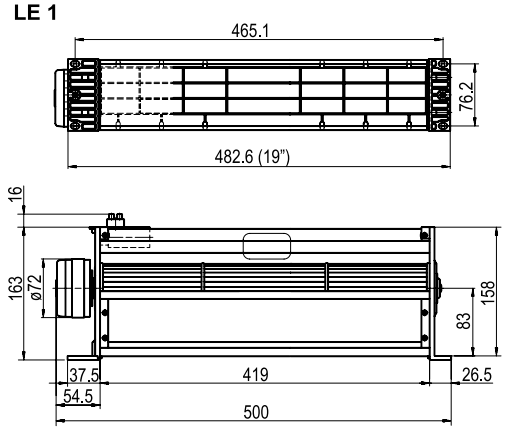

LE 2

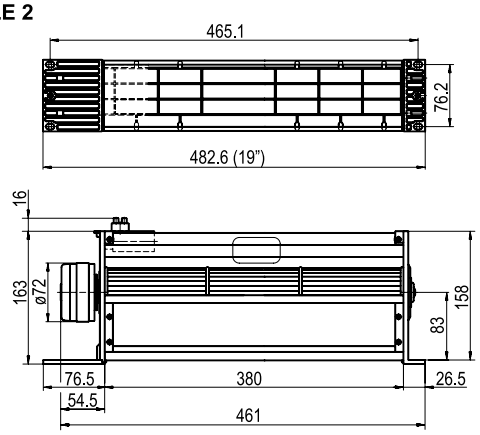

01103056

Part number in bold face type: ready for despatch within 2 working days
Part number in normal type: ready for despatch within 10 working days

Climate control – 19" fan trays

19" PUSHER FAN 2 U (DEPTH 160 MM OR 220 MM)



01194005

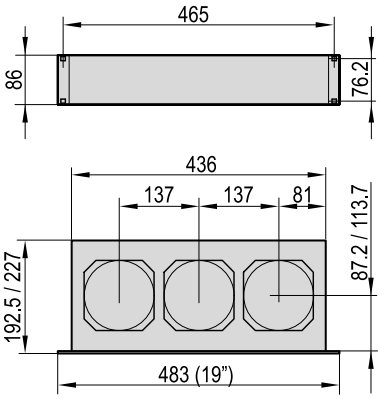

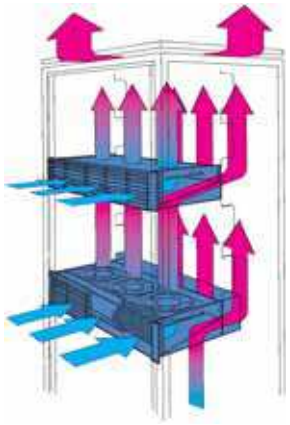

01103054A3527V

- Integrated air deflector prevents heat buildup in the assemblies mounted below
- Optionally with rear additional fan, 2 U, for active cooling of assemblies beneath the pusher fan
- Can be adapted to subracks
- Contact protection in accordance with DIN EN ISO 13857

CE

DELIVERY COMPRISES (ready to connect)

Item	Qty	Description
1	1	19" pusher fan 2 U, case, St, 1 mm, finish Al-Zn; front grille 2 U, PPO, UL 94 V-0 Filter mat, synthetic fibre, filter class G 2
2	3	Fan
3a	1	AC-version with plug (mains input, IEC 60320), incl. safety clamp, mechanical strain relief for mains input cable; socket to connect an optional supplementary fan
3b	1	Wide AC input range with DC fans, version as 3 a, additionally speed-controlled and monitored
3c	1	DC version with connecting cable, cable length 2.5 m

NOTE

- Supplementary fan for AC version see page 4.11
- Fan dimensioning, see page 4.18

ORDER INFORMATION

Description	Front panel Al, anodised 86 ... 260 V_{AC} (fan 24 V_{DC}) 515 m^3/h Part no.	Front panel, plastic, black 24 V_{DC} 515 m^3/h Part no.	115 V_{AC} 300/330 m^3/h Part no.	115 V_{AC} 445/530 m^3/h Part no.	230 V_{AC} 300/330 m^3/h Part no.	230 V_{AC} 445/530 m^3/h Part no.
For board depth 160 mm	19713-540	**10713-537**	10713-520	**10713-536**	**10713-518**	**10713-534**
For board depth 220 mm	**–**	**10713-529**	**–**	**–**	**–**	**10713-526**
Replacement fan piece	**20713-240**	**20713-240**	**20713-147**	**20713-244**	**20700-001**	**20713-243**
Equipment cable SCHUKO/UTE SCHUKO/UTE plug, IEC 60320 C13 socket, 2.5 m, 1 piece						**60103-131**
Equipment cable BS British Standard plug, IEC 60320 C13 socket, 2.5 m, 1 piece						**60103-137**
Equipment cable USA USA plug, IEC 60320 socket, 2 m, 1 piece						**60103-141**
Side panel connecting bracket between europac subrack, including fixing material kit						**21101-104**
Side panel connecting bracket between europacPRO subrack and fan, including fixing material kit, PU 4 pieces						**21101-954**
Spare filter mat PU 3 pieces						**60713-501**

Technical data with 3 fans										
Voltage	**24 V_{DC}**	**24 V_{DC}**	**115 V_{AC}**				**230 V_{AC}**			
Frequency in MHz	-	-	50	60	50	60	50	60	50	60
Airflow volume in m^3/h	515	515	300	330	445	530	300	330	445	530
Noise level in dB(A)	59.8	59.8	52.2	56.1	55.2	58.2	52.2	56.1	55.2	58.5
Max. stat. pressure in Pa	68	68	41	41	78	88	41	41	78	88
Power consumption in W	24	24	42	33	46.5	43.5	42	33	45	42
Permissible ambient temperature in °C	–20 ... +70 °C	–20 ... +70 °C	–40 ... +70 °C				–40 ... +70 °C			
Life in h, [1] at 40 °C, [2] at 55 °C	20000 [2]	20000 [2]	50000 [1]		20000 [2]		50000 [1]		20000 [2]	

Climate control – 19" fan trays

SUPPLEMENTARY FANS WITH HOUSING FOR PUSHER FAN 2 U



01194006

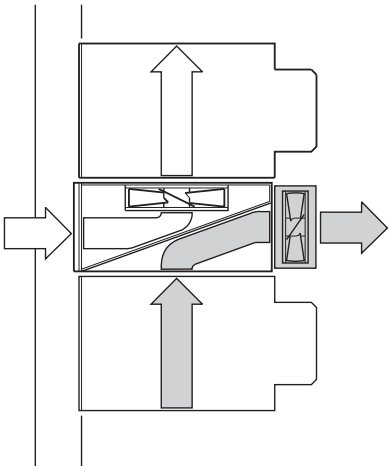

KTA44447

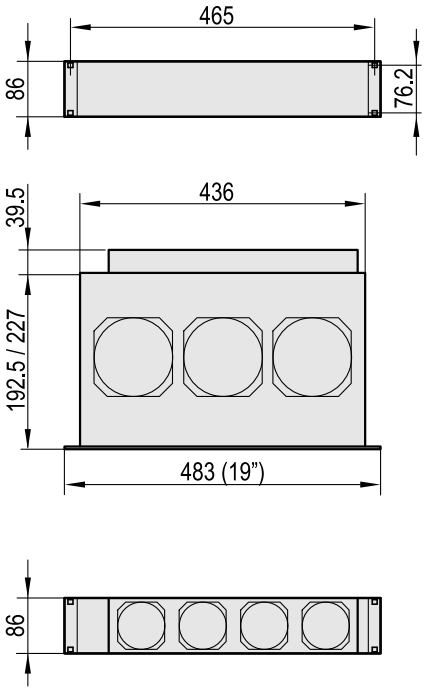

01103055

- Extra 2 U useable space:
  By using a built-on fan, components mounted below the 19" pusher fan can be cooled
- No additional voltage supply necessary: connection is via 19" pusher fan, 2 U
- Contact protection in accordance with DIN EN ISO 13857

CE

DELIVERY COMPRISES (ready to fit and connect)

Item	Qty	Description
1	1	Housing with grille, St, 1 mm, finish AlZn
2	4	Fan
3	1	Cable with plug (electrical connection via socket on 19" blower fan); safety clamp (mechanical strain relief for mains input cable)

ORDER INFORMATION

Description	115 V_{AC} Part no.	230 V_{AC} Part no.
Supplementary fans with housing for pusher fan 2 U	**10713-532**	**10713-530**

TECHNICAL DATA with 3 fans

Voltage	115 VAC		230 VAC	
Frequency in MHz	50	60	50	60
Airflow volume in m^3/h	130	155	130	155
Noise level in dB(A)	51	54	51	54
Max. stat. pressure in Pa	44	62	44	62
Permissible ambient temperature in °C	-40 ... +70		-40 ... +70	
Power consumption in W	30	24	27	21
Life in h at 55 °C	20000		20000	

NOTE

- 24 V_{DC} version available on request
- Fan dimensioning see page 4.18

Part number in bold face type: ready for despatch within 2 working days
Part number in normal type: ready for despatch within 10 working days

Climate control – 19" fan trays

19" PUSHER FAN 3 U



01102017

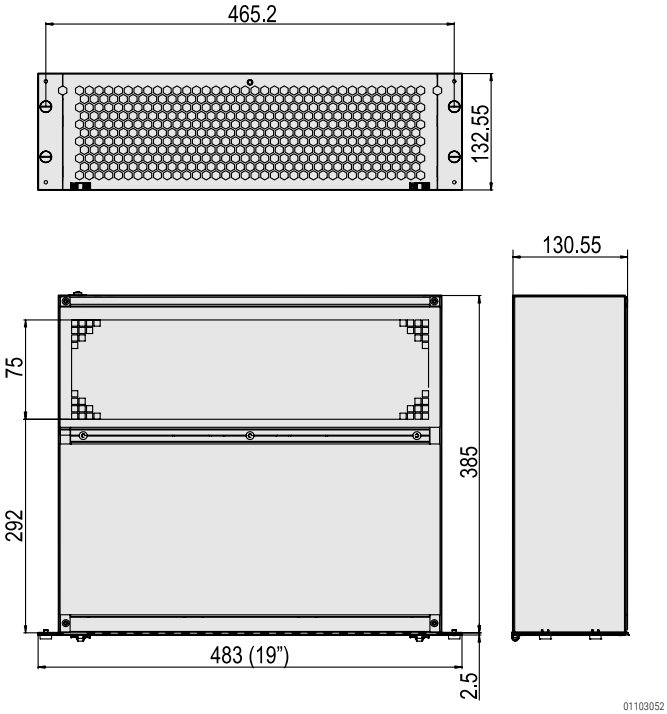

01103052

With cover plates, this pusher fan can be re-fitted to different cooling concepts

- Ventilation directed accurately to the electronics
- Air infeed from front, air exits at the top rear of cabinet (guided upwards by cover plates or via hoses to rear and upwards)
- Contact protection in accordance with DIN EN ISO 13857

CE

DELIVERY COMPRISES (ready for connection)

Item	Qty	Description
1	1	Case, St, 1 mm, AlZn; perforated hinged front panel, Al, 2.5 mm; filter mat, synthetic fibre, filter class G 2 in accordance with DIN EN 779
2	1	Radial fan with mains fuse
3	1	Plug (mains input, IEC 60320); safety clamp, mechanical strain relief for mains input cable

ORDER INFORMATION

Description	115 V_{AC} Part no.	230 V_{AC} Part no.
19" pusher fan 3 U	**10713-547**	**10713-546**
Accessories		
Equipment cable SCHUKO/UTE SCHUKO/UTE plug, IEC 60320 C13 socket, 2.5 m, 1 piece		**60103-131**
Equipment cable, BS British Standard plug, IEC 60320 C13 socket, 2.5 m, 1 piece		**60103-137**
Equipment cable, USA USA plug, IEC 60320 socket, 2 m, 1 piece		**60103-141**
Side panel connecting bracket between europac subrack and fan, including fixing material kit, PU 4 pieces		**21101-958**
Side panel connecting bracket between europacPRO subrack and fan, including fixing material kit, PU 4 pieces		**21101-954**
Spare filter mat PU 3 pieces		**60713-868**

TECHNICAL DATA

Voltage	115 VAC		230 VAC	
Frequency in MHz	50	60	50	60
Airflow volume in m^3/h	510	570	510	570
Noise level per fan in dB(A)	62	64	62	64
Max. stat. pressure in Pa	320	410	320	410
Power consumption in W	55	65	58	75
Max. ambient temperatures in °C	-20 ... +50		-20 ... +50	
Life in h at 55 °C	20000		20000	

NOTE

- Wide input voltage range 90 V ... 260 V_{AC} available on request
- Temperature control and function monitoring (alarm via RS 232) on request
- Air deflector plates for other cooling concepts see page 4.13
- Fan dimensioning see page 4.18

AIR DEFLECTOR PLATE FOR 19" PUSHER FAN 3 U

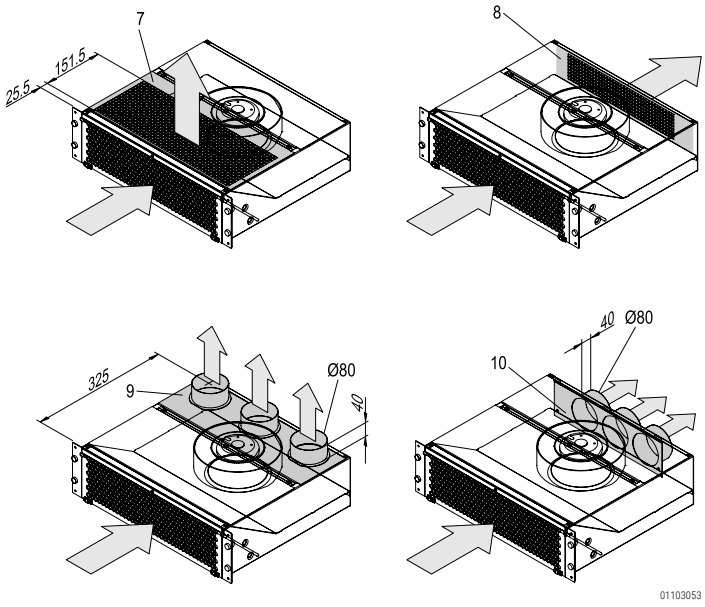

- For 19" pusher fan 3 U

ORDER INFORMATION

Item	Description	Qty/PU	Part no.
7	Air deflector plate to front, St, 1 mm, finish AlZn	1	20713-504
8	Air outlet to rear: upper cover plate, without perforation, 1 mm, finish AlZn	1	20713-505
9	Air deflector plate with hose connection on upper rear, external diameter 80 mm, St, 1 mm, finish AlZn	1	20713-503
10	Air deflector plate with hose connection to rear, external diameter 80 mm, St, 1 mm, finish AlZn	1	20713-502

CONNECTING CABLE WITH CONNECTOR SOCKET

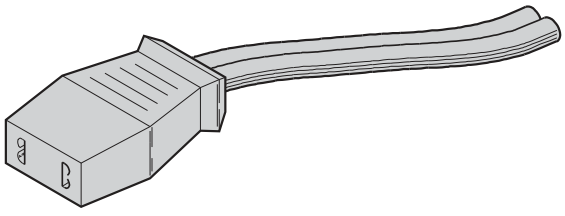

- Connecting cable with connector for AC fans (25 mm and 38 mm height) and DC fans (38 mm height), cable length 1 m

DELIVERY COMPRISES

Item	Qty	Description
1	1	Cable, PVC (2 x 0.75 mm²), 1 m long, with 2 FASTON connectors 2.8 x 0.5 mm, DIN 46343 T1

ORDER INFORMATION

Description	Part no.
Connecting cable with plug	**21101-246**

Climate control – 19" fan trays

SERVICEPLUS: CONFIGURATION WITH ASSEMBLY



- You can plan and build up your product yourself using the order information table below
- Dimensions of fan trays
  - Height 1 U
  - Width 19"
  - Depth 193, 300, 467, 604 mm for 3, 6, 9 or 12 fans
- Create your 19" fan trays from individual parts (assembled within 10 working days)

Example configuration		
Qty	Description	Order no.
1	Housing, 1 piece	20713-213
1	Front panel with switch, AC, 1 piece	20713-231/05
1	Filter mat, 1 piece	60713-246/05
6	Fan, AC, height 25 mm; mounted at position 1, 3, 5, 7, 9, 11	20700-001/05

ORDER INFORMATION

	Fan height	Fan housing 1)	Front panel without switch		Front panel with switch		Filter mat G 2	Fans
			AC (230 V)	DC	AC (230 V)	DC		
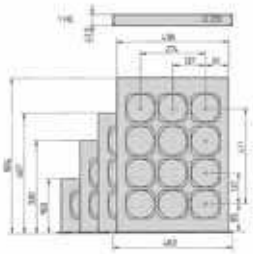 a44537		cover/base plate, St, 1 mm, finish AlZn, with perforation	1 U, Al, 3 mm, anodised; includes cable harness	1 U, Al, 3 mm, anodised; connecting cable, 2.5 m; includes cable harness	1 U, Al, 3 mm, anodised; mains switch, illuminated green; includes cable harness	1 U, Al, 3 mm, anodised; mains switch, illuminated green; connecting cable, 2.5 m; includes cable harness	can only be fitted where fan height is 25 mm	
	mm	1 piece	1 piece	1 piece	1 piece	1 piece	PU 3 pieces	see page
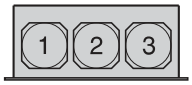 KTA44857	25	20713-212	20713-220/05	20713-224/05	20713-228/05	20713-236/05	**60713-243**	4.16
	38	20713-216	20713-220/05	20713-224/05	20713-228/05	20713-236/05	–	4.16
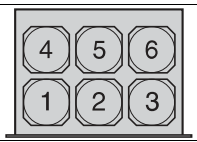 KTA44858	25	20713-213	20713-221/05	20713-225/05	20713-229/05	20713-237/05	**60713-244**	4.16
	38	20713-217	20713-221/05	20713-225/05	20713-229/05	20713-237/05	–	4.16
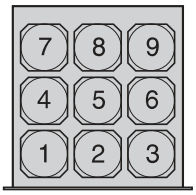 kta44859	25	20713-214	20713-222/05	20713-226/05	20713-230/05	20713-238/05	**60713-245**	4.16
	38	20713-218	20713-222/05	20713-226/05	20713-230/05	20713-238/05	–	4.16
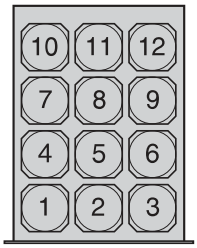 kta44860	25	20713-215	20713-223/05	20713-227/05	20713-231/05	20713-239/05	**60713-246**	4.16
	38	20713-219	20713-223/05	20713-227/05	20713-231/05	20713-239/05	–	4.16

1) Fan housing cannot be ordered without fans

NOTE

- Unused fan mounting positions are covered with foam material
- Versions for 115 V or with switch available on request
- Fan dimensioning see page 4.18

Climate control – 19" fan trays

1 U AIR DEFLECTOR CHASSIS FOR 19" FAN TRAYS



01109001



01109002

1 U air deflector chassis (bottom) with 1 U fan tray (top)

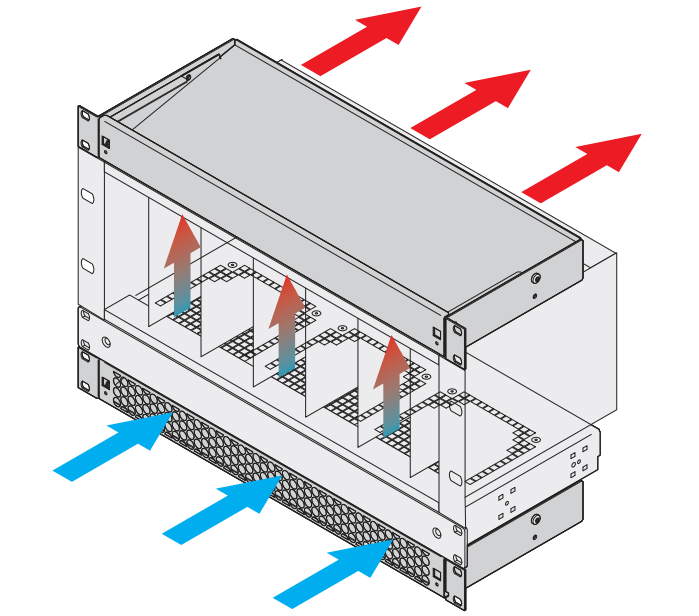

01109051

Application: air deflector chassis mounted below 19" fan tray, guides the cool air upwards from front; second air deflector chassis at top guides the warm air to the rear

- Optimised cooling together with 19" fan trays
- Vertical buildup of heat is avoided by means of improved airflow
- Fitting options:
  - One fan tray: cool air is drawn in from the front and guided upwards
  - Two fan trays: cool air is drawn in from the front, directed upwards and guided to the rear (see application diagram)
- Versions:
  - With solid front panel to direct airflow
  - With perforated front panel to allow air to flow in/out
- Optional filter mat, simple to swap during operation

DELIVERY COMPRISES (assembled)

Item	Qty	Description
1	1	Air deflector plate, St, 1 mm, finish Zincor, width 432.8 mm (without side panel)
2	2	Side panel, St, 1.5 mm, finish Zincor; with 19" mounting bracket, powder-coated (see Order information for colour)
3a	1	Front panel, perforated, St, 1.5 mm, finish Zincor, powder-coated (see Order information for colour); two quick-release fasteners, black
3b	1	Front panel, solid, St, 1.5 mm, finish Zincor, powder-coated (see Order information for colour); two quick-release fasteners, black
4	1	Assembly kit

ORDER INFORMATION

1 U air deflector chassis for 19" fan trays	Depth mm	Colour	Part no. Front panel, perforated	Part no. Front panel, solid
for single-row fan trays (3 fans)	193	RAL 7035	10713-140	10713-146
	193	RAL 9005	10713-142	10713-148
	193	RAL 9006	10713-144	10713-150
for double-row fan trays (6 fans)	330	RAL 7035	10713-141	10713-147
	330	RAL 9005	10713-143	10713-149
	330	RAL 9006	10713-145	10713-151
Accessories				
Filter mat, class G 2 for 3 fans, PU 3 pieces				**60713-169**
Filter mat, class G 2 for 6 fans, PU 3 pieces				60713-331

Part number in bold face type: ready for despatch within 2 working days
Part number in normal type: ready for despatch within 10 working days

Climate control – 19" fan trays

AC FANS/REPLACEMENT FANS



01108005

DELIVERY COMPRISES

Item	Qty	Description
1	1	Fan (width 119 mm, depth 119 mm)

ORDER INFORMATION

Description	Height mm	Airflow volume m^3/h	115 V_{AC} Part no.	230 V_{AC} Part no.
Type A	25	84	**20713-146**	**20713-142**
Type B	25	108	**20713-147**	**20700-001**
Type C	38	162	**20713-244**	**20713-243**
Assembly kit for fan PU 1 kit				**21102-013**

DIMENSIONS AC fans

Type	Type A		Type B		Type C	
Frequency in Hz	50	60	50	60	50	60
Airflow volume in m^3/h	84	90	108	120	162	192
Noise level per fan in dB(A)	29	30	34	38	37	41
Max. static pressure in Pa	23	21	41	41	73	88
Max. ambient temperature in °C	70	70	70	70	70	70
Power consumption in W	8	7	14	11	15	14
Dimensions: height in mm (width 119 mm × depth 119 mm)	25		25		38	

- Please order connecting cable separately, see page 4.13
- Please order protective grille separately, see page 4.17

DC FANS/REPLACEMENT FANS



01108005

DELIVERY COMPRISES

Item	Qty	Description
1a	1	Fan, height 38 mm, with plug connection
1b	1	Fan, height 25.5 mm, connecting cable, length 55 mm, connector with 2 x FASTON connectors (2.8 x 0.8 mm)

ORDER INFORMATION

Height mm	Airflow volume m^3/h	Power consumption W	Input voltage V	Part no.
25.5	171	5.3	24	**20713-172**
38	184	8	12	**20713-241**
38	184	8	24	**20713-240**
38	184	8	48	20713-242
Assembly kit for fan PU 1 kit				**21102-013**

TECHNICAL DATA DC fans

Voltage in VDC	24	12	24	48
Dimensions: height in mm (width 119 mm × depth 119 mm)	25	38	38	38
Airflow volume in m^3/h	171	184	184	184
Noise level per fan in dB(A)	41.5	42	42	42
Max. stat. pressure in Pa	50.5	68	68	68
Max. ambient temperature in °C	70	70	70	70
Power consumption in W	7	8	8	8

- Please order connecting cable for 38 mm high fans separately, see page 4.13
- Please order protective grille separately, see page 4.17

PROTECTIVE GRILLE TO SNAP-IN

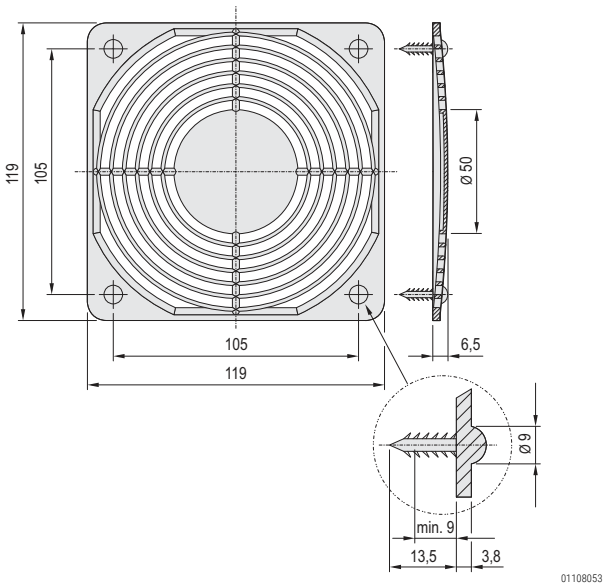

- Protective grille for direct mounting on AC and DC fans

DELIVERY COMPRISES

Item	Qty	Description
1	1	Fibre glass reinforced plastic (PA), black, in accordance with DIN 31001, UL 94 V-0

ORDER INFORMATION

Description	Part no.
Protective grille, plastic, to snap-in	**60225-052**

PROTECTIVE GRILLE, PLASTIC, TO SCREW-ON

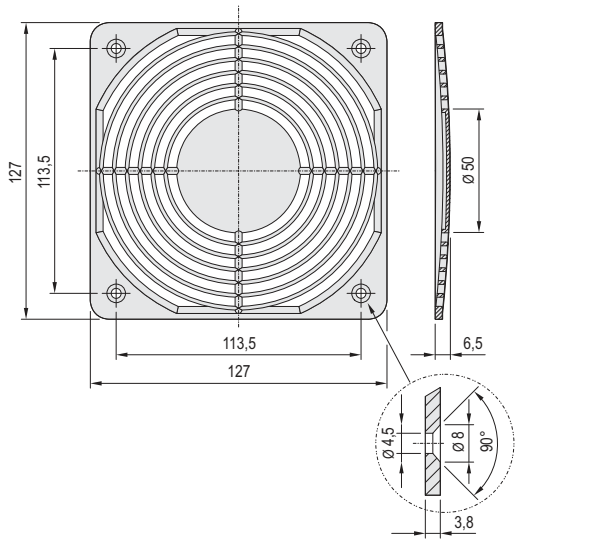

- Protective grille for AC and DC fans
- Grille may be mounted on a front panel or the wall of the housing

DELIVERY COMPRISES

Item	Qty	Description
1	1	Fibre glass reinforced plastic (PA), black, in accordance with DIN 31001, UL 94 V-0

ORDER INFORMATION

Description	Part no.
Protective grille, plastic, to screw-on	**60225-053**
Assembly kit for plastic grille (4 screws, 4 washers, 4 nuts M4), PU 1 set	**21102-014**

PROTECTIVE GRILLE, METAL, TO SCREW-ON

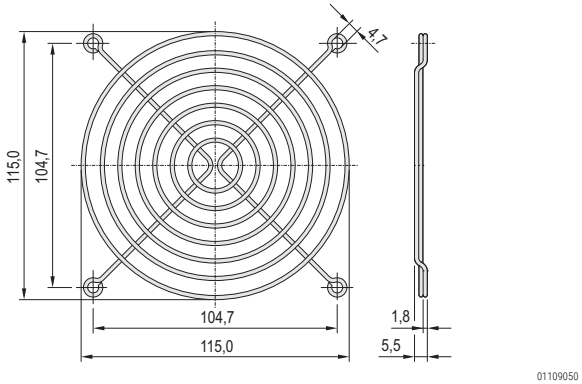

- Protective grille for direct mounting on AC and DC fans
- Optimised noise level and air resistance

DELIVERY COMPRISES

Item	Qty	Description
1	1	St, 1 mm

ORDER INFORMATION

Description	Part no.
Protective grille, metal, to screw-on	**60197-019**
Assembly kit for metal grille (4 screws, 4 washers, 4 nuts M4), PU 1 set	**21102-015**

Part number in bold face type: ready for despatch within 2 working days
Part number in normal type: ready for despatch within 10 working days

Climate control – 19" fan trays

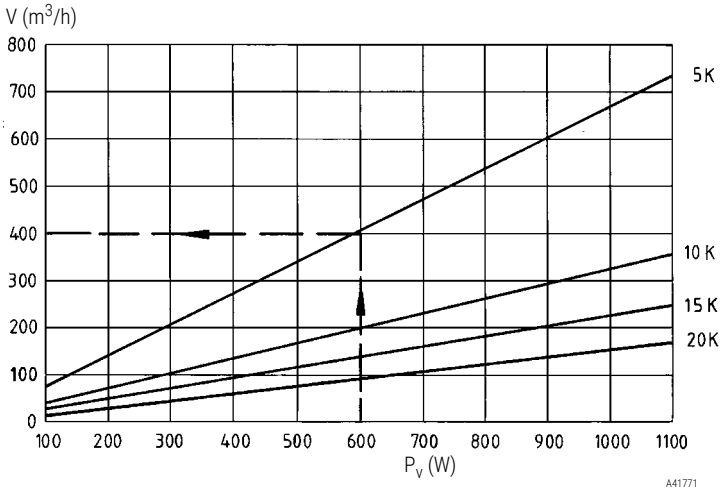

For local heat dissipation, the airflow volume required to expel the heat produced is calculated.

Note
The cabinet ventilation is not taken into account here.
The required airflow volume is calculated as follows:

$V = (f \times P_V)/\Delta T$

The air constant f = 3.3 m^3K/Wh.
ΔT is the temperature difference between the ambient temperature of the sub-assembly and that of the air drawn in.

Example of readings
- Pv = 600 W
- air sucked in: 25 °C
- permissible ambient temperature of the sub-assembly = 30 °C

1. $\Delta T = T_i - T_u = 30\ °C - 25\ °C = 5\ K$
2. From $P_v = 600$ W to the curve for $\Delta T = 5$ K
3. From the intersection point to the airflow volume V = 400 m^3/h

Climate control – 19" fan trays

Climate control – Air filtered fan

OVERVIEW

MAIN KATALOG

Cabinets 1

Wall mounted cases 2

Accessories for cabinets and wall mounted cases . . 3

Climate control . . 4

Electronics cases 5

Subracks/ 19" chassis 6

Front panels, plug-in units 7

Systems 8

Power supply units 9

Backplanes 10

Connectors, front panel component system 11

Appendix 12



01108012



01108014

Simple to fit without tools by clipping in (can also be bolted)



01108015

Easy tool-less change of filter mat



01108016

Fluted filter to increase degree of ingress protection from IP 54 to IP 55



01108013

Easy tool-less wiring with spring clamp connector

Climate control – Air filtered fan

OVERVIEW

AIR FILTERED FANS, INGRESS PROTECTION FROM IP 54 TO IP 55 IN ACCORDANCE WITH IEC 60529

- **Simple to fit without tools by clipping in (can also be bolted)**
- **Easy conversion from pressure to suction operation**
- **Easy tool-less change of filter mat**
- **7 performance classes with 6 different assembly dimensions**



01108017

Air filtered fans



01108026

Outlet/inlet filters



01108016

Fluted filters

AIR FILTERED FANS

- Airflow capacity of 25 m^3/h ... 770 m^3/h (FL 100 ... FL 600)
- 3 supply voltages (230 V_{AC}, 115 V_{AC}, 24 V_{DC})
- Outlet/inlet filter
- Fluted filter to increase degree of ingress protection from IP 54 to IP 55
- Side by side mounting of several air filtered fans is possible

SERVICEPLUS

e.g. special colours
e.g. other cabinet dimensions
e.g. EMC solutions
e.g. custom solutions

30407004

Overview **4.20**

How to dimension air filtered fans . . **4.22**
Reading example . **4.22**
EMC solutions . . . **4.22**

Air filtered fans
FL 100 . . . . . **4.23**
FL 200 . . . . . **4.24**
FL 225 . . . . . **4.25**
FL 250 . . . . . **4.26**
FL 300 . . . . . **4.27**
FL 500 . . . . . **4.28**
FL 600 . . . . . **4.29**

AIR FILTERED FAN CALCULATIONS



01108017

To establish the size of the air-filtered fan required, calculate the air throughput necessary to dissipate the amount of heat contained in the cabinet.
The necessary airflow volume (at sea level) is calculated thus:

$V = f \times (P_V - P_S) / ?T$ with

V = airflow volume
f = air constant = 3.3 m^3 K/Wh
P_V = thermal power loss
(sum of heat emitted by the equipment in the cabinet)
P_S = radiant power
(heat that is radiated from the cabinet without additional ventilation)
?T = temperature difference between the air drawn in (ambient temperature T_u) and the exhaust air (internal cabinet temperature T_i),
$?T = T_i - T_u$

READING EXAMPLE

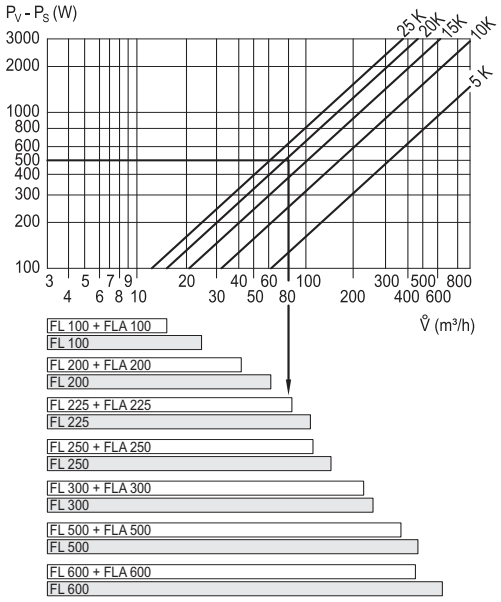

kta45245

The devices in the cabinet produce e.g. a power loss of 840 W. Of these 840 W, the cabinet releases 340 W to the environment via its surfaces. The air sucked in from outside the cabinet has a temperature of 20 °C.
A maximum temperature of 40 °C is to be permitted in the cabinet.

So which air filtered fan should be employed?

1. P_V = 840 W, P_S = 340 W, read-off point $P_V - P_S$ = 500 W
2. $?T = T_i - T_a$ = 40 °C - 20 °C = 20 °C = 20 K
3. On the characteristic for 20 K we obtain, at $P_V - P_S$ = 500 W, a minimum necessary airflow volume of V = 80 m^3/h.
4. An FL 250 air filtered fan should be used that gives an airflow volume of 131 m^3/h or, if used in combination with the FLA 250 exhaust filter, of 95 m^3/h.

EMC SOLUTIONS

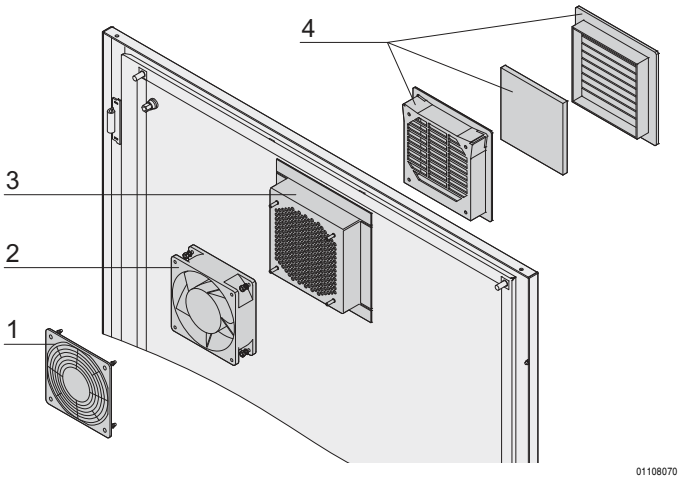

01108070

- EMC shielding in accordance with your requirements
- Customised developments

DELIVERY COMPRISES

Item	Description
1	Protective fan grille
2	Fan
3	EMC hood
4	FLA outlet/inlet filter

AIR FILTERED FAN FL 100



01108018



01108019

Air outlet/inlet filter FLA 100



01108020

Replacement filter IP 54

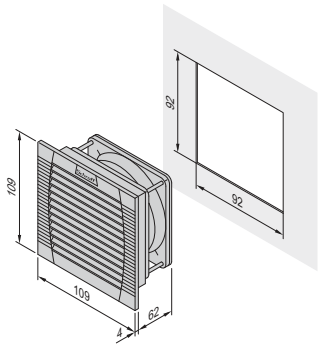

01108057

Air filtered fan FL 100

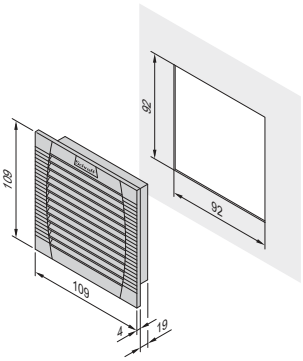

01108058

Air outlet/inlet filter FLA 100

Sheet thicknesses 1 ... 2 mm - cut-out 92 x 92 mm;
Sheet thicknesses >2 ... 3 mm - cut-out 93 x 93 mm

- Airflow volume 19 m^3/h
- Converts simply from push to pull operation
- Ingress protection IP 54, NEMA type 12
- Simple to fit without tools by clipping in

DELIVERY COMPRISES (completely assembled)

Item	Qty	Description
1	1	Front grille and case, plastic, ABS, RAL 7035, self-extinguishing, UL 94 V-0
2	1	Filter, filter class G 3 (EN 779)
3	1	Fan
4	1	2 wire connection, length 310 mm

ORDER INFORMATION

Description	24 V_{DC} Part no.	115 V_{AC} Part no.	230 V_{AC} Part no.
Air filtered fan FL 100	EF100-24R5	EF100-115R5	**EF100R5**
Air outlet/inlet filter FLA 100 (items 1 + 2 included), 1 piece			**EFA100R5**
Replacement filter IP 54 for FL 100 and FLA 100, filter class G 3 (EN 779), PU 5 pieces			**EFM100**

TECHNICAL DATA

Voltage	230 VAC	115 VAC	24 VDC
Frequency	50/60 Hz	50/60 Hz	DC
Airflow volume with filter (free blowing)	19/24 m^3/h	19/24 m^3/h	19 m^3/h
Combination FL + FLA	12/14 m^3/h	12/14 m^3/h	12 m^3/h
Max. static pressure	38 Pa	38 Pa	38 Pa
Noise level (in accordance with EN ISO 3741, 50 Hz)	33 dB(A)	33 dB(A)	33 dB(A)
Operating temperatures	–15 ... +55 °C	–15 ... +55 °C	–15 ... +55 °C
Power consumption	12/11 W	12/11 W	2.4 W
Filter efficiency	88 %	88 %	88 %
MTBF at 40 °C	52000 h	52000 h	70000 h
Approvals	CE, UL, cUL, GOST		

NOTE

- Mounting for sheet thicknesses from 1 to 3 mm
- Multiple fan solution on request
- Dimensions, cut-outs and tolerances see user manual

Part number in bold face type: ready for despatch within 2 working days
Part number in normal type: ready for despatch within 10 working days

Climate control – Air filtered fans

AIR FILTERED FAN FL 200



01108018





01108019 01108021

Air outlet/inlet filter FLA 200 Fluted filter IP 55



01108020

Replacement filter IP 54

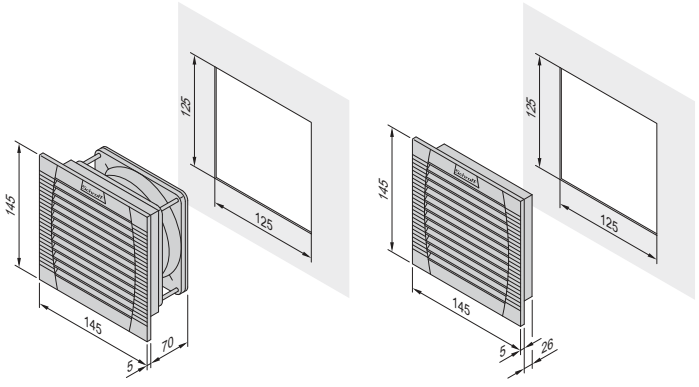

01108059 01108060

Air filtered fan FL 200 Air outlet/inlet filter FLA 200
Sheet thicknesses 1 ... 2 mm - cut-out 125 x 125 mm;
Sheet thicknesses >2 ... 3 mm - cut-out 126 x 126 mm

- Airflow volume 60 m^3/h
- Converts simply from push to pull operation
- Ingress protection IP 54, with fluted filter IP 55, NEMA type 12
- Simple to fit without tools by clipping in (can also be bolted)

DELIVERY COMPRISES (Completely assembled)

Item	Qty	Description
1	1	Front grille and case, plastic, ABS, RAL 7035, self-extinguishing, UL 94 V-0
2	1	Filter, filter class G3 (EN 779)
3	1	Fan
4	1	Connection AC (terminal strip), connection DC (2 wires, 310 mm long)

ORDER INFORMATION

Description	24 V_{DC} Part no.	115 V_{AC} Part no.	230 V_{AC} Part no.
Air filtered fan FL 200	EF200-24R5	EF200-115R5	**EF200R5**
Air outlet/inlet filter FLA 200 (items 1 + 2 included), 1 piece			**EFA200R5**
Replacement filter IP 54 for FL 200 and FLA 200, filter class G 3 (EN 779), PU 5 pieces			**EFM200**
Fluted filter IP 55 for FL 200 and FLA 200, filter class G 4 (EN 779), PU 5 pieces			**EFMP200**

TECHNICAL DATA

Voltage	230 V_{AC}	115 V_{AC}	24 V_{DC}
Frequency	50/60 Hz	50/60 Hz	DC
Airflow volume with IP 54 filter (free blowing)	60/66 m^3/h	60/66 m^3/h	60 m^3/h
Airflow volume with IP 55 filter (free blowing)	56/64 m^3/h	56/64 m^3/h	56 m^3/h
Combination FL + FLA IP 54	38/42 m^3/h	38/42 m^3/h	38 m^3/h
Combination FL + FLA IP 55	40/46 m^3/h	40/46 m^3/h	40 m^3/h
Max. static pressure IP 54	60 Pa	60 Pa	60 Pa
Max. static pressure IP 55	57 Pa	57 Pa	61 Pa
Noise level in accordance with EN ISO 3741, 50 Hz)	44 dB(A)	44 dB(A)	44 dB(A)
Max. ambient temperature	15 ... +55 °C	-5 ... +55 °C	-25 ... +55 °C
Power consumption	19/18 W	19/18 W	5 W
Filter efficiency IP 54	83 %	83 %	83 %
Filter efficiency IP 55	91 %	91 %	91 %
MTBF at 40 °C	37000 h	37000 h	62000 h
Approvals	CE, UL, cUL, GOST		

NOTE

- Mounting for sheet thicknesses from 1 to 3 mm
- Multiple fan solution on request
- Dimensions, cut-outs and tolerances see user manual

Climate control – Air filtered fans

AIR FILTERED FAN FL 225



01108022



01108019 01108021

Air outlet/inlet filter FLA 225 Fluted filter IP 55



01108020

Replacement filter IP 54

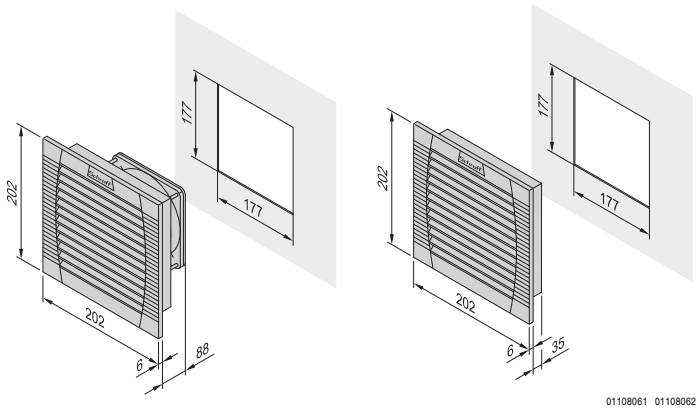

01108061 01108062

Air filtered fan FL 225 Air outlet/inlet filter FLA 225
Sheet thicknesses 1 ... 2 mm - cut-out 177 x 177 mm;
Sheet thicknesses >2 ... 3 mm - cut-out 178 x 178 mm

- Airflow volume 98 m^3/h
- Converts simply from push to pull operation
- Ingress protection IP 54, with fluted filter IP 55, NEMA type 12

DELIVERY COMPRISES (completely assembled)

Item	Qty	Description
1	1	Front grille and case, plastic, ABS, RAL 7035, self-extinguishing, UL 94 V-0
2	1	Filter, filter class G 3 (EN 779)
3	1	Fan
4	1	Connection AC (terminal block), DC (spring terminal strip)

ORDER INFORMATION

Description	115 V_{AC} Part no.	230 V_{AC} Part no.
Air filtered fan FL 225	EF220-115R5	**EF220R5**
Air outlet/inlet filter FLA 225 (items 1 + 2 included), 1 piece		**EFA220R5**
Replacement filter IP 54 for FL 225 and FLA 225, filter class G 3 (EN 779), PU 5 pieces		**EFM220**
Fluted filter IP 55 for FL 225 and FLA 225, filter class G 4 (EN 779), PU 5 pieces		**EFMP220**

TECHNICAL DATA

Voltage	230 VAC	115 VAC
Frequency	50/60 Hz	50/60 Hz
Airflow volume with IP 54 filter (free blowing)	98/108 m^3/h	98/108 m^3/h
Airflow volume with IP 55 filter (free blowing)	100/110 m^3/h	100/110 m^3/h
Combination FL + FLA IP 54	73/80 m^3/h	73/80 m^3/h
Combination FL + FLA IP 55	55/64 m^3/h	55/64 m^3/h
Max. static pressure IP 54	66 Pa	66 Pa
Max. static pressure IP 55	61 Pa	61 Pa
Noise level (in accordance with EN ISO 3741, 50 Hz)	40 dB(A)	40 dB(A)
Max. ambient temperature	–15 ... +55 °C	–15 ... +55 °C
Power consumption	19/18 W	19/18 W
Filter efficiency IP 54	88 %	88 %
Filter efficiency IP 55	91 %	91 %
MTBF at 40 °C	37000 h	37000 h
Approvals	CE, UL, cUL, GOST	

NOTE

- Mounting for sheet thicknesses from 1 to 3 mm
- Multiple fan solution on request
- Dimensions, cut-outs and tolerances see user manual

Part number in bold face type: ready for despatch within 2 working days
Part number in normal type: ready for despatch within 10 working days

AIR FILTERED FAN FL 250



01108022



Air outlet/inlet filter FLA 250/300



01108019 01108021

Fluted filter IP 55



Replacement filter IP 54

01108020

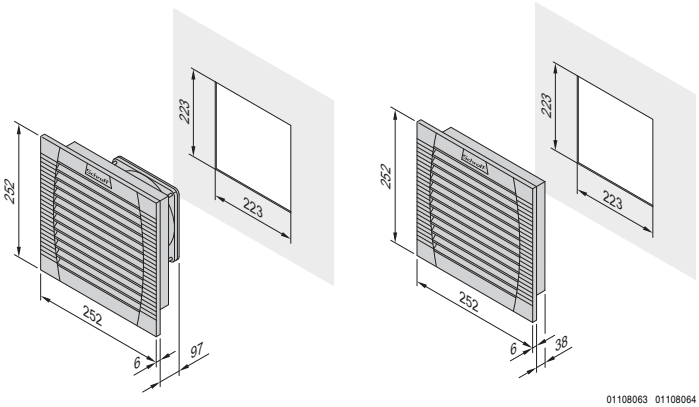

01108063 01108064

Air filtered fan FL 250 Air outlet/inlet filter FLA 250/300
Sheet thicknesses 1 ... 2 mm - cut-out 223 x 223 mm;
Sheet thicknesses >2 ... 3 mm - cut-out 224 x 224 mm

- Airflow volume 125 m^3/h
- Converts simply from push to pull operation
- Ingress protection IP 54, with fluted filter IP 55, NEMA type 12
- Simple to fit without tools by clipping in (can also be bolted)

DELIVERY COMPRISES (completely assembled)

Item	Qty	Description
1	1	Front grille and case, plastic, ABS, RAL 7035, self-extinguishing, UL 94 V-0
2	1	Filter, filter class G 3 (EN 779)
3	1	Fan
4	1	Connection spring terminal strip

ORDER INFORMATION

Description	115 V_{AC} Part no.	230 V_{AC} Part no.
Air filtered fan FL 250	EF250-115R5	**EF250R5**
Air outlet/inlet filter FLA 250/300 (items 1 + 2 included), 1 piece		**EFA250-300R5**
Replacement filter IP 54 for FL 250/300 and FLA 250/300, filter class G 3 (EN 779), PU 5 pieces		**EFM250-300**
Fluted filter IP 55 for FL 250/300 and FLA 250/300, filter class G 4 (EN 779), PU 5 pieces		**EFMP250-300**

TECHNICAL DATA

Voltage	230 VAC	115 VAC
Frequency	50/60 Hz	50/60 Hz
Airflow volume with IP 54 filter (free blowing)	125/138 m^3/h	125/138 m^3/h
Airflow volume with IP 55 filter (free blowing)	145/160 m^3/h	145/160 m^3/h
Combination FL + FLA IP 54	93/102 m^3/h	93/102 m^3/h
Combination FL + FLA IP 55	109/113 m^3/h	109/113 m^3/h
Max. static pressure IP 54	52 Pa	52 Pa
Max. static pressure IP 55	49 Pa	49 Pa
Noise level (in accordance with EN ISO 3741, 50 Hz)	40 dB(A)	40 dB(A)
Max. ambient temperature	–15 ... +55 °C	–15 ... +55 °C
Power consumption	18/17 W	18/17 W
Filter efficiency IP 54	88 %	88 %
Filter efficiency IP 55	91 %	91 %
MTBF at 40 °C	40000 h	40000 h
Approvals	CE, UL, cUL, GOST	

NOTE

- Mounting for sheet thicknesses from 1 to 3 mm
- Multiple fan solution on request
- Dimensions, cut-outs and tolerances see user manual

Climate control – Air filtered fans

AIR FILTERED FAN FL 300



01108024



01108019 01108021

Air outlet/inlet filter FLA 250/300 Fluted filter IP 55



01108020

Replacement filter IP 54

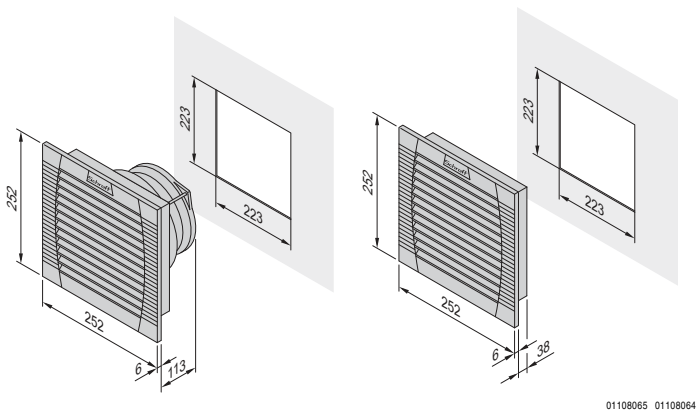

01108065 01108064

Air filtered fan FL 300 Air outlet/inlet filter FLA 250/350
Sheet thicknesses 1 ... 2 mm - cut-out 223 x 223 mm;
Sheet thicknesses >2 ... 3 mm - cut-out 224 x 224 mm

- Airflow volume 223 m^3/h
- Converts simply from push to pull operation
- Ingress protection IP 54, with fluted filter IP 55, NEMA type 12
- Simple to fit without tools by clipping in (can also be bolted)

DELIVERY COMPRISES (completely assembled)

Item	Qty	Description
1	1	Front grille and case, plastic ABS, RAL 7035, self-extinguishing, UL 94 V-0
2	1	Filter, filter class G 3 (EN 779)
3	1	Fan
4	1	Connection spring terminal strip

ORDER INFORMATION

Description	115 V_{AC} Part no.	230 V_{AC} Part no.
Air filtered fan FL 300	EF300-115R5	**EF300R5**
Air outlet/inlet filter FLA 250/300 (items 1 + 2 included), 1 piece		**EFA250-300R5**
Replacement filter IP 54 for FL 250/300 and FLA 250/300, filter class G 3 (EN 779), PU 5 pieces		**EFM250-300**
Fluted filter IP 55 for FL 250/300 and FLA 250/300, FLA 250/300, filter class G 4 (EN 779), PU 5 pieces		**EFMP250-300**

TECHNICAL DATA

Voltage	230 VAC	115 VAC
Frequency	50/60 Hz	50/60 Hz
Airflow volume with IP 54 filter (free blowing)	223/247 m^3/h	223/247 m^3/h
Airflow volume with IP 55 filter (free blowing)	233/265 m^3/h	233/265 m^3/h
Combination FL + FLA IP 54	201/223 m^3/h	201/223 m^3/h
Combination FL + FLA IP 55	180/207 m^3/h	180/207 m^3/h
Max. static pressure IP 54	116 Pa	116 Pa
Max. static pressure IP 55	112 Pa	112 Pa
Noise level (in accordance with EN ISO 3741, 50 Hz)	42 dB(A)	42 dB(A)
Max. ambient temperature	-15 ... +55 °C	-15 ... +55 °C
Power consumption	45/39 W	50/45 W
Filter efficiency IP 54	88 %	88 %
Filter efficiency IP 55	91 %	91 %
MTBF at 40 °C	40000 h	40000 h
Approvals	CE, UL, cUL, GOST	

NOTE

- Mounting for sheet thicknesses from 1 to 3 mm
- Multiple fan solution on request
- Dimensions, cut-outs and tolerances see user manual

Part number in bold face type: ready for despatch within 2 working days
Part number in normal type: ready for despatch within 10 working days

Climate control – Air filtered fans

AIR FILTERED FAN FL 500



01108025



Air outlet/inlet filter FLA 500/600



01108019 01108021

Fluted filter IP 55



01108020

Replacement filter IP 54

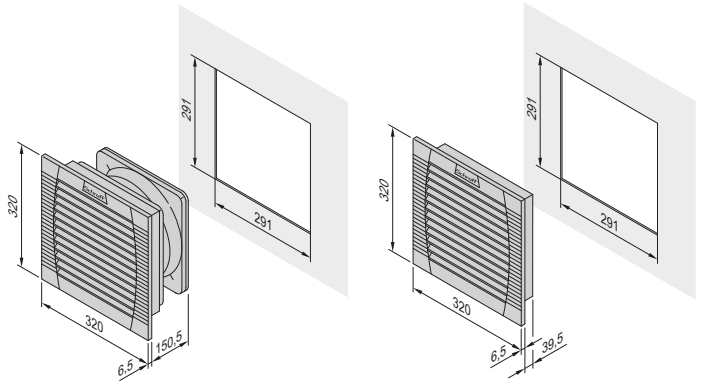

01108067 01108068

Air filtered fan FL 500/600 Air outlet/inlet filter FLA 500/600
Sheet thicknesses 1 ... 2 mm - cut-out 223 x 223 mm;
Sheet thicknesses >2 ... 3 mm - cut-out 224 x 224 mm

- Airflow volume 480 m^3/h
- Converts simply from push to pull operation
- Ingress protection IP 54, with fluted filter IP 55, NEMA type 12
- Simple to fit without tools by clipping in (can also be bolted)

DELIVERY COMPRISES (completely assembled)

Item	Qty	Description
1	1	Front grille and case, plastic, ABS, RAL 7035, self-extinguishing UL 94 V-0
2	1	Filter, filter class G3 (EN 779)
3	1	Fan
4	1	Connection spring terminal strip

ORDER INFORMATION

Description	115 V_{AC} Part no.	230 V_{AC} Part no.
Air filtered fan FL 500	EF500-115R5	**EF500R5**
Air outlet/inlet filter FLA 500/600 (items 1 + 2 included), 1 piece		**EFA500-700R5**
Replacement filter IP 54 for FL 500/600 and FLA 500/600, filter class G 3 (EN 779), PU 5 pieces		**EFM500-700**
Fluted filter IP 55 for FL 500/600 and FLA 500/600, FLA 500/600, filter class G 4 (EN 779), PU 5 pieces		**EFMP500-700**

TECHNICAL DATA

Voltage	230 VAC	115 VAC
Frequency	50/60 Hz	50/60 Hz
Airflow volume with IP 54 filter (free blowing)	480/480 m^3/h	480/480 m^3/h
Airflow volume with IP 55 filter (free blowing)	505/505 m^3/h	505/505 m^3/h
Combination FL + FLA IP 54	370/370 m^3/h	370/370 m^3/h
Combination FL + FLA IP 55	380/380 m^3/h	380/380 m^3/h
Max. static pressure IP 54	76 Pa	76 Pa
Max. static pressure IP 55	74 Pa	74 Pa
Noise level (in accordance with EN ISO 3741, 50 Hz)	54 dB(A)	54 dB(A)
Max. ambient temperature	–15 ... +55 °C	–15 ... +55 °C
Power consumption	80/100 W	90/110 W
Filter efficiency IP 54	88 %	88 %
Filter efficiency IP 55	91 %	91 %
MTBF at 40 °C	40000 h	40000 h
Approvals	CE, UL, cUL, GOST	

NOTE

- Mounting for sheet thicknesses from 1 to 3 mm
- Multiple fan solution on request
- Dimensions, cut-outs and tolerances see user manual

Climate control – Air filtered fans

AIR FILTERED FAN FL 600



01108025



01108019 01108021

Air outlet/inlet filter FLA 500/600 Fluted filter IP 55



01108020

Replacement filter IP 54

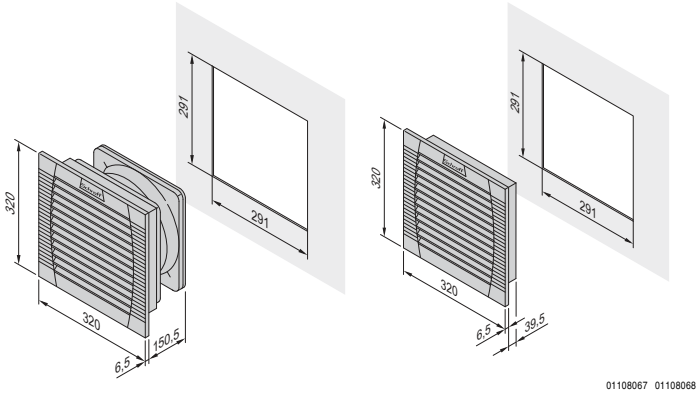

01108067 01108068

Air filtered fan FL 500/600 Air outlet/inlet filter FLA 500/600
Sheet thicknesses 1 ... 2 mm - cut-out 223 x 223 mm;
Sheet thicknesses >2 ... 3 mm - cut-out 224 x 224 mm

- Airflow volume 640 m^3/h
- Converts simply from push to pull operation
- Ingress protection IP 54, with fluted filter IP 55, NEMA type 12
- Simple to fit without tools by clipping in (can also be bolted)

DELIVERY COMPRISES (completely assembled)

Item	Qty	Description
1	1	Front grille and case, plastic, ABS, RAL 7035, self-extinguishing, UL 94 V-0
2	1	Filter, filter class G 3 (EN 779)
3	1	Fan
4	1	Connection spring terminal strip

ORDER INFORMATION

Description	115 V_{AC} Part no.	230 V_{AC} Part no.
Air filtered fan FL 600	EF600-115R	**EF600R5**
Air outlet/inlet filter FLA 500/600 (items 1 + 2 included), 1 piece		**EFA500-700R5**
Replacement filter IP 54 for FL 500/600 and FLA 500/600, filter class G 3 (EN 779), PU 5 pieces		**EFM500-700**
Fluted filter IP 55 for FL 500/600 and FLA 500/600, filter class G 4 (EN 779), PU 5 pieces		**EFMP500-700**

TECHNICAL DATA

Voltage	230 VAC	115 VAC
Frequency	50/60 Hz	50/60 Hz
Airflow volume with IP 54 filter (free blowing)	640/653 m^3/h	640/653 m^3/h
Airflow volume with IP 55 filter (free blowing)	770/785 m^3/h	770/785 m^3/h
Combination FL + FLA IP 54	445/445 m^3/h	445/445 m^3/h
Combination FL + FLA IP 55	490/501 m^3/h	490/501 m^3/h
Max. static pressure IP 54	134 Pa	134 Pa
Max. static pressure IP 55	132 Pa	132 Pa
Noise level in accordance with EN ISO 3741, 50 Hz)	63 dB(A)	63 dB(A)
Max. ambient temperature	-15 ... +55 °C	-15 ... +55 °C
Power consumption	120/160 W	130/170 W
Filter efficiency IP 54	88 %	88 %
Filter efficiency IP 55	91 %	91 %
MTBF at 40 °C	40000 h	40000 h
Approvals	CE, UL, cUL, GOST	

NOTE

- Mounting for sheet thicknesses from 1 to 3 mm
- Multiple fan solution on request
- Dimensions, cut-outs and tolerances see user manual

Part number in bold face type: ready for despatch within 2 working days
Part number in normal type: ready for despatch within 10 working days

HEATERS FROM 10 W TO 150 W



10 / 20 W



50 / 100 / 150 W

- Compact heater without fan
- Simple and fast assembly with clip-on attachment
- Broad range voltage input AC/DC 120 ... 240 V
- Low surface temperature, protective insulation, and temperature limitation with PTC resistance

DELIVERY INCLUDES (completely assembled)

Item	Qty	Description
1	1	Heater element, voltage AC/DC 100 ... 240 V; PTC resistor, self-regulating
2	1	Heating body housing, plastic UL94 V-0; type of fixing: Clip for 35 mm DIN rail EN 60715
3	1	Connection: 2-pin (10 W, 20 W) and/or 4-pin (50 W, 100 W, 150 W) terminal, 2.5 mm², torque 0.8 Nm max.

ORDER INFORMATION

Description	Part no.
10 W	**60715-220**
20 W	**60715-221**
50 W	**60715-222**
100 W	**60715-223**
150 W	**60715-224**

NOTE

- Thermostat for heating see page 4.65
- Hygrostat see page 4.68

Dimension drawing

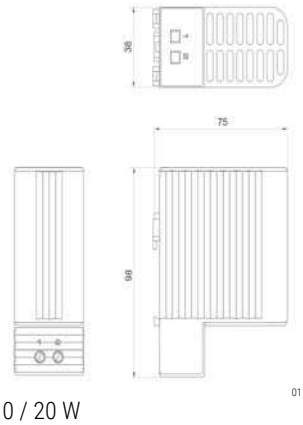

10 / 20 W

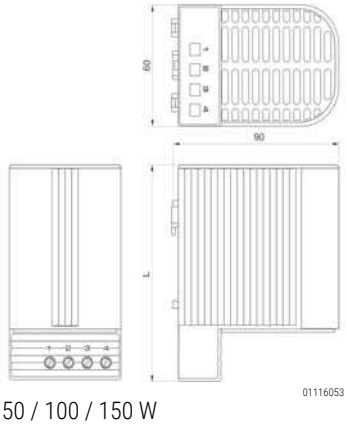

50 / 100 / 150 W

TECHNICAL DATA

	10 W	20 W	50 W	100 W	150 W
Heater output in W	10	20	50	100	150
Max. switch-on current in A	1.0	2.5	2.5	4.5	8.0
Pre-fuse, delay-action in A	2.0	4.0	4.0	8.0	10.0
Type of protection	IP 20	IP 20	IP 20	IP 20	IP 20
Class of protection	II	II	II	II	II
Dimensions H × W × D in mm	98 × 38 × 75	98 × 38 × 75	110 × 60 × 90	110 × 60 × 90	150 × 60 × 90
Weight in kg	0.2	0.3	0.3	0.3	0.5
Connection	2-pin terminal, 2.5 mm², torque 0.8 Nm		4-pin terminal, 2.5 mm², torque 0.8 Nm		
Surface temperature in °C	< + 80°C, with exception of above mesh surface				
Test seal	CE, UL, VDE, EAC, RoHS				
Mounting	Clip-on attachment for 35 mm DIN rail (EN 60715)				

HEATERS WITH HEATER FANS FROM 150 W TO 400 W



01116004

- Compact heater with fan, small, compact design with high heater output
- Simple and fast assembly with clip-on attachment or bolt fixing
- Dynamic heating up and temperature limitation by PTC technology
- Quiet

DELIVERY INCLUDES (completely assembled)

Item	Qty	Description
1	1	Heater element, voltage 230 V_{AC}, resistor (PTC resistance) self-regulating
2	1	Heating body housing, plastic UL94 V-0; type of fixing: Clip for 35 mm DIN rail EN 60715
3	1	Axial fan, airflow from bottom to top
4	1	Connection: 2-pin terminal, 2.5 mm², torque 0.8 Nm max.

ORDER INFORMATION

Description	Part no.
150 W	**60715-225**
250 W	**60715-226**
400 W	**60715-227**

NOTE

- Thermostat for heating see page 4.65
- Hygrostat see page 4.68

Dimension drawing

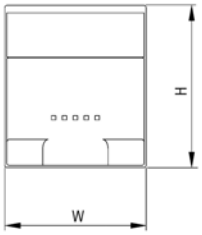

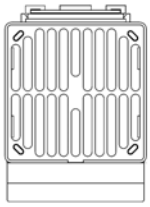

01116050

Clip attachment

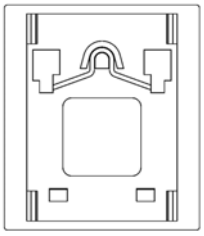

01116051

TECHNICAL DATA

	150 W	250 W	400 W
Heater output in W	150	250	400
Max. switch-on current in A	9.0	12	15
Pre-fuse, delay-action in A	10	10	16
Axial fan, free blowing output	13.8 m²/h	45 m²/h	45 m²/h
Type of protection	IP 20	IP 20	IP 20
Class of protection	II	II	II
Dimensions H x W x D in mm	75 x 65x 90	90 x 85 x 111	90 x 85 x 111
Weight in kg	0.3	0.5	0.5
Surface temperature in °C	< + 50°C, with exception of above mesh surface		< + 65°C, with exception of above mesh surface
Connection	2-pin terminal, 2.5 mm², torque 0.8 Nm max.		
Test seal	CE, UL, VDE, EAC, RoHS		
Mounting	Clip-on attachment for 35 mm DIN rail (EN 60715)		

Part number in bold face type: ready for shipping within 2 working days
Part number in normal type: ready for shipping within 10 working days

HEATERS FROM 30 W TO 150 W



- Radiator heater (without fan)
- Simple and fast assembly with clip-on attachment and press-on terminal connection
- Wide input voltage range 110 ... 250 V_{AC}
- Temperature limiting with PTC resistor

DELIVERY COMPRISES (completely assembled)

Item	Qty	Description
1	1	Heater element, voltage range 110 ... 250 V_{AC}; resistor (PTC) self-regulating
2	1	Heating body, Al extrusion, anodised Fixing: clip for 35 mm DIN rail EN 50022
3	1	Connection: type 30, with connecting cable (3 x 0.5 mm^2, 300 mm long, black); type 45, 100, 150 with press-on terminal connection (for stranded/rigid wire 3 x 0.5 ... 2.5 mm^2)

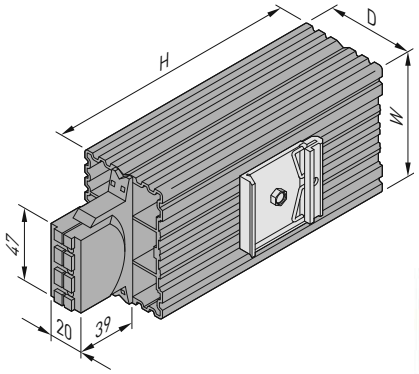



Support rail

ORDER INFORMATION

Description	30 Part no.	45 Part no.	100 Part no.	150 Part no.
Heaters from 30 W to 150 W	**60715-020**	**60715-021**	**60715-023**	**60715-030**
Support rail DIN rail EN 50022 (35 mm), length 215 mm, 1 piece				**20715-001**

TECHNICAL DATA

	30 W	45 W	100 W	150 W
Heater output in W	30	45	100	150
Surface temperature in °C	approx. 100	approx. 105	approx. 130	approx.140
Max. switch-on current in A	3,0	3,5	4.0	9,0
Type of protection	IP 54	IP 20	IP 20	IP 20
Class of protection	I	I	I	I
Dimensions H × W × D in mm	70 × 25 × 50	69 × 70 × 50	144 × 70 × 50	224 × 70 × 50
Weight in kg	0.2	0.3	0.5	0.7
Test seal	VDE, CE, UL (File E150057)	CE, UL (File E150057)	CE, UL (File E150057)	CE, UL (File E150057)
Assembly	Clip-on attachment for 35 mm DIN rail (EN 50022)			

NOTE

- Thermostat for heating see page 4.65
- Hygrostat see page 4.68

HEATER FANS 475/550 W



01108030

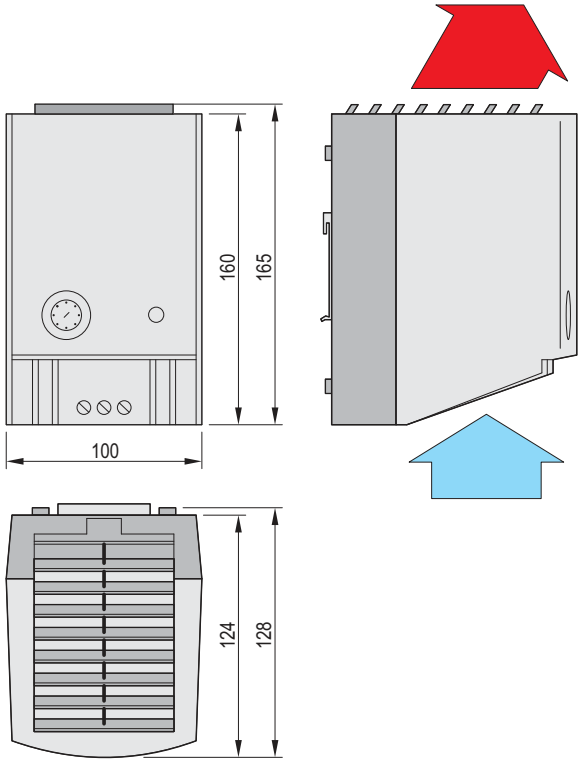

01108069



00508013

Support rail

- Heater with fan and thermostat
- Simple and fast assembly with clip-on attachment
- 3-pin terminal clamp, separate heater/fan connection
- Thermostat from 0 ... 60 °C
- Temperature limiting with PTC resistor

DELIVERY COMPRISES (completely assembled)

Item	Qty	Description
1	1	Plastic housing, polycarbonate (RAL 9002, grey white), clip for 35 mm DIN rail EN 50022
2	1	Heater element, 230 V_{AC}, resistor (PTC) self-regulating
3	1	Thermostat
4	1	230 V_{AC} fan

ORDER INFORMATION

Description	Part no.
Heater 475 W	**60715-017**
Heater 550 W	**60715-018**
Support rail DIN rail EN 50022 (35 mm), length 215 mm, 1 piece	**20715-001**

TECHNICAL DATA

Voltage range	230 VAC			
Frequency	50 Hz	60 Hz	50 Hz	60 Hz
Heater output	**475 W**	550 W	**550 W**	650 W
Air capacity of axial fan	35 m^3/h	39 m^3/h	45 m^3/h	50 m^3/h
Current at switch-on approx.	11 A		13 A	
Weight	0.9 kg		1.1 kg	
Heater element	Resistor (PTC), self-regulating			
Connection	3-pin connecting terminal, 2.5 mm^2, separate connection heating/fan			
Thermostat	Adjustment range 0 ... 60 °C			
Control lamp of control system	Glow lamp			
Temperature control	In the event of fan failure			
Type of protection	IP 20			
Class of protection	II			
Assembly	Clip-on attachment for 35 mm DIN rail (EN 50022)			
Dimensions	Height 165 mm, width 100 mm, depth 128 mm			

Part number in bold face type: ready for despatch within 2 working days
Part number in normal type: ready for despatch within 10 working days

HEATER FAN 400 W, MODULAR



01108007

Example of a complete heater unit: 1: heater, 2: fan, 3: protective grille, 4: connection cable



01108006

Heater element



00508013

Support rail

- Modular system consisting of:
  heater element, fan, protective grille and connecting cable
- Fan not included in delivery extent; please order fan with desired air capacity separately
- Simple and fast assembly with clip-on attachment
- Overheating protection through thermal switch

DELIVERY COMPRISES (completely assembled)

Item	Qty	Description
1	1	Heater element, high-performance cartridge
2	1	Connecting cable fan - heating distributor, length 0.3 m
3	1	GND/earth cable, ring tag - open end, length 0.3 m
4	1	Clip-on attachment for DIN rail with assembly kit

ORDER INFORMATION

Description	230 V_{AC} Part no.
Heater fan 400 W, modular	**60715-029**
Support rail DIN rail EN 50022 (35 mm), length 215 mm, 1 piece	**20715-001**

TECHNICAL DATA

Voltage range	230 V_{AC}
Current at switch-on	1.8 A
Heater output	400 W
Air capacity m^3/h	Please choose desired fan
Surface temperature with fan	Approx. 140 °C
Type of protection	IP 20
Class of protection	I, with GND/earthing
Dimensions: height x width x depth in mm	22 x 120 x 160
Assembly	Clip for 35 mm DIN rail EN 50022

NOTE

- **Attention**: Danger of overheating, never use heater without fan
- Fan see page 4.63
- Thermostat for heating see page 4.65
- Hygrostat see page 4.68

AC FANS FOR HEATING 400 W



01108005

Connecting cable

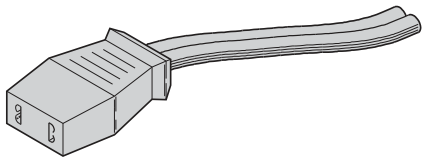

KTA43091

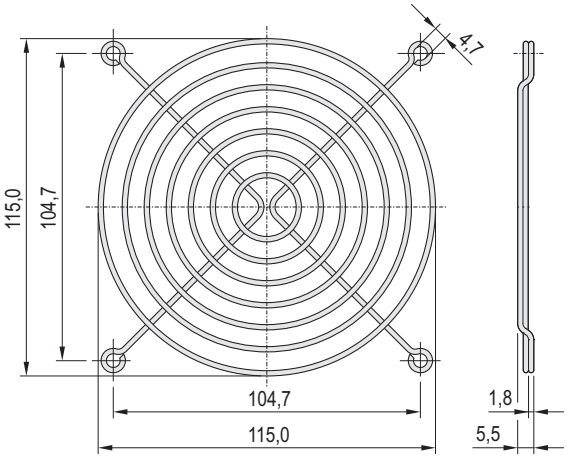

01108055

Protective grille

- The fan is screwed below the heater and the cable is connected to the heater (please order connecting cable and protective grille separately)

DELIVERY COMPRISES

Item	Qty	Description
1	1	Fan (width 119 mm, depth 119 mm)

ORDER INFORMATION

	Height mm	Airflow volume m^3/h	115 V_{AC} Part no.	230 V_{AC} Part no.
Type A	25	84	**20713-146**	**20713-142**
Type B	25	108	**20713-147**	**20700-001**
Type C	38	162	**20713-244**	**20713-243**
PVC (2 x 0.75 mm²), 1 m long with 2 Faston connectors 2.8 x 0.5 mm to DIN 46343 T1, 1 piece				**21101-246**
Protective grille, metal, to screw-on				**60197-019**

DIMENSIONS AC fans

Type	Type A		Type B		Type C	
Frequency in Hz	50	60	50	60	50	60
Airflow volume in m^3/h	84	90	108	120	162	192
Noise level per fan in dB(A)	29	30	34	38	37	41
Max. static pressure in Pa	23	21	41	41	73	88
Max. ambient temperature in °C	70	70	70	70	70	70
Power consumption in W	8	7	14	11	15	14
Dimensions: height in mm (width 119 mm × depth 119 mm)	25		25		38	

NOTE

- Please order connection cable and protective grille separately

Part number in bold face type: ready for despatch within 2 working days
Part number in normal type: ready for despatch within 10 working days

SPEED CONTROL FOR FANS WITH C13 PLUG

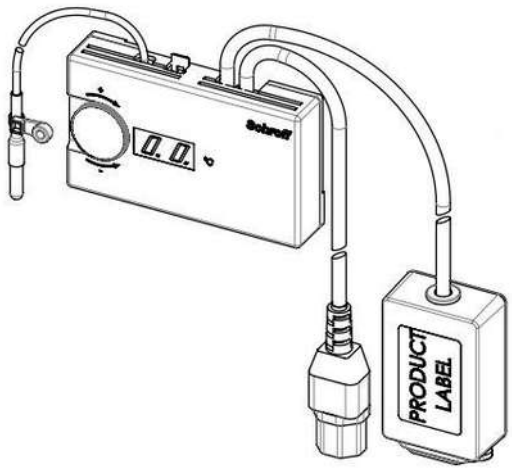

Speed controller with IEC C13 connecting cables

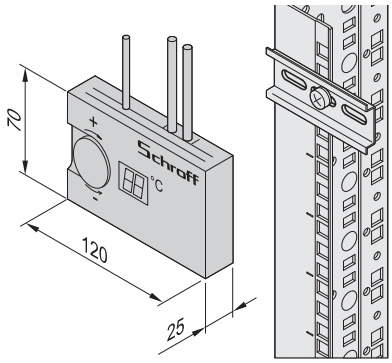

01105055

Block diagram

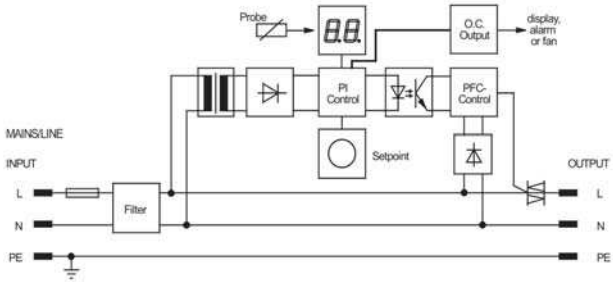

01111050

Speed varies in relation to temperature

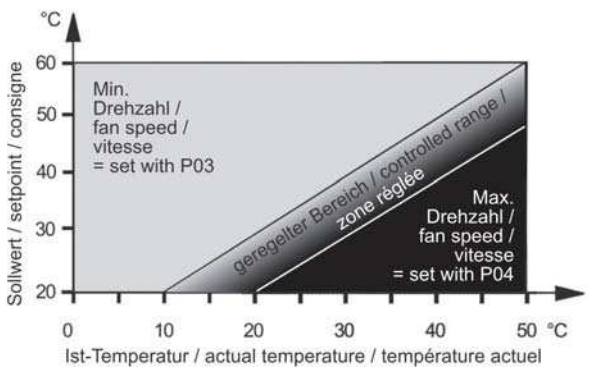

01111051

- Suitable for all AC fans and fan units (up to 300 W) with IEC 60320 C13 plug (plug & play)
- Simple to mount on the support rail provided
- Simple adjustment of switch-on temperature (with knob and digital display)
- External sensor can be fitted at a desired measurement point
- Open-collector output (parametrisable)
  - Alarm output (active/passive)
  - DC fans (PWM output)
  - Remote display (via optional digital display with front panel)

DELIVERY COMPRISES

NEW

Item	Qty	Description
1	1	Speed controller; input/output voltages 115 ... 240 V_{AC}, see Technical Data
2	1	Temperature sensor, cable length 1.5 m
3	1	Fan cable, with IEC 60320 socket, 2.0m
4	1	Mains cable, with IEC 60320 connecting plug, 0,.5m
5	1	Support rail, St, zinc-plated (EN 50022)
6	1	Assembly kit

Please order the connecting cables / main cables separatly

ORDER INFORMATION

Speed control for fans with C13 plug	Part no.
Mains cable IEC 60320 C13 Plug	**60118-616**
Accessories	
Thermostat with digital display 230 VAC , 1 piece	**Page 4.67**
Thermostat with digital display 115 VAC , 1 piece	**Page 4.67**
Connecting cable for DC fans or alarm output Length 2 m, 2-wire (0.34 mm^2), 1 piece	**60715-007**
Connection cable, SCHUKO/UTE connector IEC C13 plug	**62150-191**
Connection cable, IEC C13 plug / connector IEC C13	**60197-053**
Connection cable, BS connector IEC C13 plug	**60103-137**

TECHNICAL DATA

Voltage range	115 ... 240 V_{AC} (90 ... 264 V_{AC})
Frequency	48 ... 62 Hz
Power consumption	max. 4 VA
Display	LCD display, height 13 mm, red
Max. connection power	300 W (230 V_{AC}), 150 W (115 V_{AC})
Max. continuous current	1.3 A
Adjustment range	+20 ... +60 °C with potentiometer
Fan speed frequency	25 ... 100 %
Sensor	External NTC resistor
Sensor connection	AMP plug contact and cable, 1.5 m, 2 x 0.22 mm
In case of sensor failure	Max. speed
Fan connection	Cable with C13 IEC 60320 socket, 2.0m
Open-collector output	AMP plug contact, programmable function, $V_{max.}$ 30 V_{DC}, $I_{max.}$ 30 mA
Mains connection	Cable with plug, 0.5m
Mechanics	Case, IP 30, plastic, weight 0.5 kg, mounts on horizontal rail with lip DIN EN 50022
Dimensions	Width 120 mm, height 70 mm, depth 25 mm
Environmental conditions	0 ... 60°C, max. 85 % rel. humidity, non-condensing

NOTE

- Thermostat with digital display, see page 4.67

THERMOSTAT WITH INTEGRATED TEMPERATURE SENSOR



- To control fans or heaters
- Adjustment range 0 ... 60 °C
- Individual adaptation with three separate components: thermostat (for cooling or heating), assembly material, connecting cable (IEC connector or ferrules)
- 2 versions
  - for heating
  - for cooling

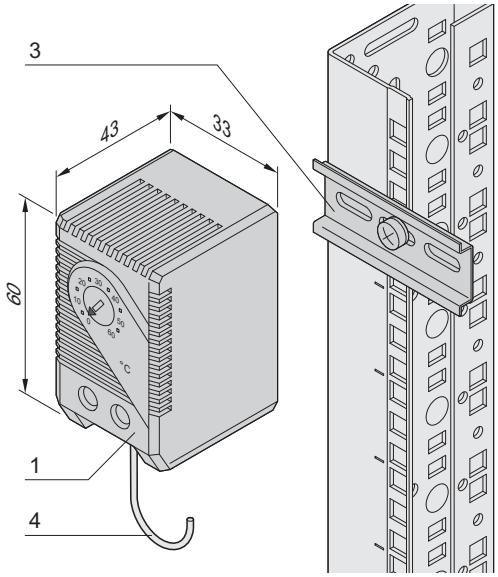

01108050



01108009

Connection cable: 2-pin, ferrules - IEC socket



01108010

Connection cable: 2-pin, ferrules - 3-pin, ferrules

DELIVERY COMPRISES

Item	Qty	Description
1	1	Thermostat, width 33 mm, height 60 mm, depth 43 mm; clip-on attachment for 35 mm DIN rail EN 50022, switched voltage 120 ... 250 V_{AC}
2	1	User manual

ORDER INFORMATION

Description	Part no. for cooling	Part no. for heating
Thermostat with integrated temperature sensor	**ETR201**	**ETR202**
Accessories		
Item 3 DIN rail (EN 50022) 35 mm; length 75 mm; with fixing materials kit, PU 1 set		**21120-178**
Item 4 Connection cable, SCHUKO/UTE connector, cable length 1.5 m; connection on thermostat/hygrostat, 2-pin, ferrules; connection on fan IEC socket; 1 piece		**62150-201**
Item 4 Connection cable, SCHUKO/UTE connector, cable length 1.5 m; connection on thermostat/hygrostat, 2-pin, ferrules; connection on fan/heater, 3-pin, ferrules, 1 piece		**62150-264**

DIMENSIONS

Thermostat	for cooling (make contact), blue control button	for heating (break contact), red control button
Adjustment range	0 ... 60 °C	
Switching temperature difference	7 K (± 4 K tolerance)	
Sensing element	Thermobimetal (snap-action contact)	
Contact resistance	<10 m?	
Lifespan	>100000 cycles	
Max. switch performance	10 A at 250 V_{AC}, 15 A at 120 V_{AC}; 30 W at DC voltage	
Connection	2-pin clamp, up to 2.5 mm^2, torque max. 0.5 Nm	
Case	Plastic, in accordance with UL 94 V-0, light grey	
Dimensions	Height 60 mm, width 33 mm, depth 43 mm	
Assembly	Clip for 35 mm DIN rail, EN 50022	
Weight	40 g	
Operating/storage temperature	-20 ... +80 °C/-45 ... +80 °C	
Protection class	IP 20	
Plastic Material	UL94 V0, RAL 7035	

ORDER INFORMATION

Description	Part no.
Thermostat with integrated temperature sensor assembly material and cable (Schuko / UTE), 230V	**24630-119**
Thermostat with integrated temperature sensor assembly material and cable (IEC 60320, C13 /C14), 230V	**24630-116**

Part number in bold face type: ready for despatch within 2 working days
Part number in normal type: ready for despatch within 10 working days

THERMOSTAT WITH INTEGRATED TEMPERATURE SENSOR



01102008

- To control heaters or fans
- Adjustment range 5 ... 60 °C

DELIVERY COMPRISES

Item	Qty	Description
1	1	Thermostat with clip-on attachment for 35 mm DIN rail EN 50022, voltage 200 ... 250 V_{AC} and 100 ... 130 V_{AC}
2	1	Support rail, length 200 mm
3	1	Connection cable, length 1.5 m
4	1	Strain relief
5	1	Assembly kit for cabinet assembly

ORDER INFORMATION

Description	Part no.
Thermostat with integrated temperature sensor	**20715-002**

TECHNICAL DATA

Dimensions	Height: 75 mm, width: 75 mm, depth: 25 mm
Adjustment range	5 ... 60 °C
Switch difference	0,5 K
Supply voltage	200 ... 250 V_{AC}
Contact load (ohmic load/inductive load)	Heat (terminals 1 - 2) 10 A / 4 A Cool (terminals 1 - 3) 5 A / 2 A
Contacts	Changeover contact, single pole
Type of assembly	Bolt-on, snap mounting for slide rail

THERMOSTAT WITH EXTERNAL TEMPERATURE SENSOR



01102007

- To control heaters or fans
- External sensor can be positioned near the critical sub-assembly
- Adjustment range 20 ... 60 °C, switch difference 3 ... 10 K

CE

DELIVERY COMPRISES

Item	Qty	Description
1	1	Thermostat with external temperature sensor, sensor length approx. 1.7 m
2	1	Mounting plate for cabinet assembly, Al, 2.5 mm
3	1	Assembly kit

ORDER INFORMATION

Description	Part no.
Thermostat with external temperature sensor	**20715-003**

TECHNICAL DATA

Dimension (height x width x depth)	93 mm x 68 mm x 44 mm
Adjustment range	20 ... 60 °C
Switching difference	3 ... 10 K
Mains/line voltage	90 ... 260 V_{AC}
Contact load (ohmic load/inductive load)	24 A/10 A
Contacts	Change-over, single pin
Assembly	Screw-fixed

THERMOSTAT WITH DIGITAL DISPLAY



01197001

- Adjustment range from -50 to +100 °C (switch difference 0 ... 10 °C)
- Display switchable from °C to °F
- Programmable (secured against unauthorised operation)
- 3-character red segment display

ORDER INFORMATION

Description	Part no.
Thermostat with digital display, 230 V_{AC}	**60715-132**
Thermostat with digital display, 115 V_{AC}	**60715-133**
Front panel 1 U, RAL 7035 with cut-out for thermostat	**30118-315**
Front panel 1 U, anodised with cut-out for thermostat	**30118-267**
Front panel 1 U, RAL 7021 with cut-out for thermostat	**30118-360**

Front panel 1 U

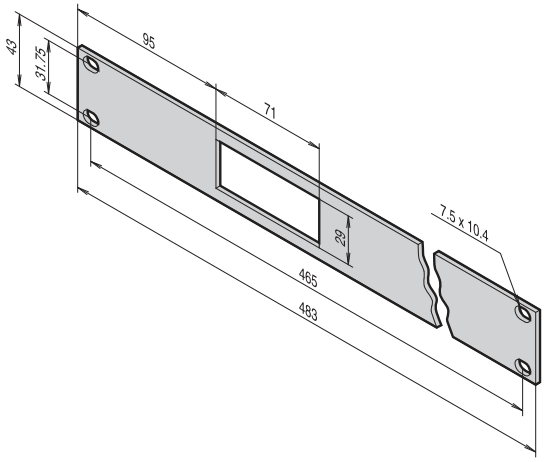

SZA45550

TECHNICAL DATA

Operating voltage	115 V_{AC} or 230 V_{AC}
Power consumption	Approx. 3.5 W
Dimensions	Height: 35 mm, width: 76 mm, depth: 59 mm
Assembly cut-out	28.8 x 70.5 mm
Adjustment range	–50 ... +100 °C
Switch difference	0 ... 10 K selectable
Data safeguarding at power failure	Non-volatile memory
Contact load (ohmic load/inductive load)	8 A/3 A (ohmic/inductive load)
Input/sensor	PTC resistance, -55 ... +120 °C, cable length 3 m
Contacts	Relay, changeover contact, single pin
Protection class to front	IP 54
Connection	Screw-on terminals, 2.5 mm^2
Fixing	With clamping bracket
Type of assembly	Can be screwed on

Part number in bold face type: ready for despatch within 2 working days
Part number in normal type: ready for despatch within 10 working days

HYGROSTAT



01116006

Hygrostat with adjustable and permanently set relative humidity

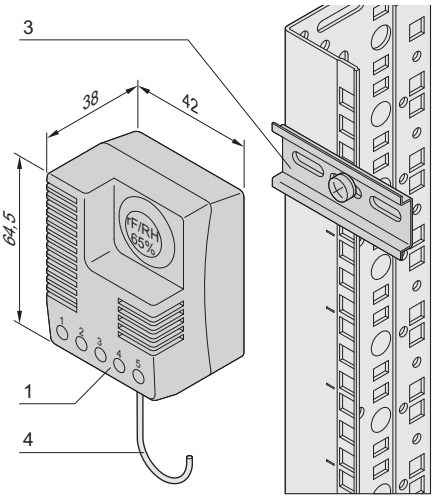

01108051



01108009

connecting cable, connection cable, 2-pole, ferrule - IEC-(female) connector; input jack; bush; socket



01108010

connecting cable, connection cable, 2-pole, ferrules - ferrules

- Adjustable or fixed relative air humidity
- Switches fan or heaters when the set value is reached
- Visual display
- Integrated LED lights up when the connected consumer is switched on
- Individual adaptation with three separate components: Hygrostat, assembly material, connecting cable (input with SCHUKO/UTE connector; output with IEC connector or open end) please order separately

DELIVERY INCLUDES (assembled)

Item	Qty	Description
1	1	Hygrostat, width 42 mm, height 64.5 mm, depth 38 mm; clip-on attachment for 35 mm DIN rail EN 50022
2	1	User manual

ORDER INFORMATION

Description	Part no.
Hygrostat, fixed, 65 % air humidity	**60715-138**
Hygrostat, adjustable, 40 ... 90 % air humidity	**60715-213**
Accessories	
DIN rail (EN 50022) Item 3 35 mm; length 75 mm; with fixing materials kit, PU 1 set	**21120-178**
Connection cable Item 4 SCHUKO/UTE connector, cable length 1.5 m; connection on thermostat/hygrostat, 2-pin, ferrules; connection on fan IEC socket; 1 piece	**62150-201**
Connection cable Item 4 SCHUKO/UTE connector, cable length 1.5 m; connection on thermostat/hygrostat, 2-pin, ferrules; connection on fan/heater, 3-pin, ferrules, 1 piece	**62150-264**

TECHNICAL DATA

Supply voltage	230 V_{AC}, 50/60 Hz	
Default setting for relative air humidity	65 % fixed	40 ... 90% adjustable
Switch difference	5 % air humidity (w 1 % air humidity tolerance at 25 °C)	
Switch contact	Changeover contact (relay)	
Lifespan	> 50,000 cycles	
Max. switching capacity	8 A (16 A for 10 s)	
Mains supply	2-pin terminal, up to 2.5 mm^2, torque max. 0.5 Nm	
Output change-over relay	3-pin terminal, up to 2.5 mm^2, torque max. 0.5 Nm	
Case	Plastic, in accordance with UL 94 V-0, light gray	
Dimensions	Height 64.5 mm, width 42 mm, depth 38 mm	
Type of assembly	Clip for 35 mm DIN rail, EN 50022	
Weight	65 g	
Operating/storage temperature	0 ... +60 °C/-20 ... +70 °C	
Max. storage humidity	90 % air humidity (non-condensing)	
Type of protection	IP 20	

IEC INPUT PLUG

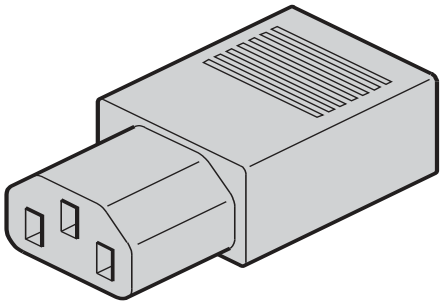

KTA45246

- For connection of fans
- Bolted housing made of heat-resistant plastic (UL 94 V-0)
- 10 A/250 V_{AC}, protection class I

ORDER INFORMATION

Description	Part no.
IEC input plug	**60715-046**

Part number in bold face type: ready for shipping within 2 working days
Part number in normal type: ready for shipping within 10 working days

North America

Warwick, RI, USA
Tel +1.401.738.1722
San Diego, CA, USA
Tel +1.858.740.2400

Europe, Middle East & India

Straubenhardt, Germany
Tel +49 7082 794 0
Betschdorf, France
Tel +33 3 88 90 64 90
Warsaw, Poland
Tel +48 22 209 98 35
Hemel Hempstead,
Great Britain
Tel +44 1442 24 04 71
Lainate, Italy
Tel +39 02 932 714 1
Dubai, United Arab Emirates
Tel +971 4 82 38 666
Bangalore, India
Tel +91 80 6715 8900
Istanbul, Turkey
Tel +90 541 368 0941

Asia Pacific

Shanghai, China
Tel +86 21 2412 6943
Singapore
Tel +65 6768 5800
Shin-Yokohama, Japan
Tel +81 45 476 0271

Our powerful portfolio of brands:

CADDY ERICO HOFFMAN RAYCHEM SCHROFF TRACER

nVent

nVent.com/SCHROFF

©2018 nVent. All nVent marks and logos are owned or licensed by nVent Services GmbH or its affiliates. All other trademarks are the property of their respective owners.
nVent reserves the right to change specifications without notice.