

Image may differ from product. See technical specification for details.

# FSNL 518-615

## Split plummer (pillow) block housing, SNL 2, 3, 5 and 6 series

SNL plummer (pillow) block housings are the most popular SKF bearing housings on the market, developed to be the first choice for design, quality and economy. They enable the incorporated bearings to achieve maximum service life with less need for maintenance. Different housing variants and seal designs are available, making the use of tailored

housings virtually unnecessary and enabling cost-effective bearing arrangements to be made.

- Easy to install
- Cost-effective bearing arrangement
- Reduce maintenance
- Minimize lubricant leakage

# Overview

## Dimensions

| | |
|---|---|
| Diameter of bearing seat | 160 mm |
| Width of bearing seat | 65 mm |
| Centre height (pillow block) | 100 mm |
| Centre distance between bolt holes | 290 mm |
| Centre distance between bolt holes (axial direction) | 50 mm |
| Attachment bolt diameter | 16 mm |

## Properties

| | |
|---|---|
| Housing type | Plummer/pillow block |
| Housing configuration | Two-piece |
| Mounting arrangement | Through shaft/Shaft end |
| Number of bolt holes for fasteners | 4 |
| Material, housing | Cast iron |
| Bearing housing seal type | Without |
| Housing lubrication feature/possibility | Grease |

## Logistics

| | |
|---|---|
| Product net weight | 13.5 kg |
| eClass code | 23-05-17-01 |
| UNSPSC code | 31171519 |

## Technical specification

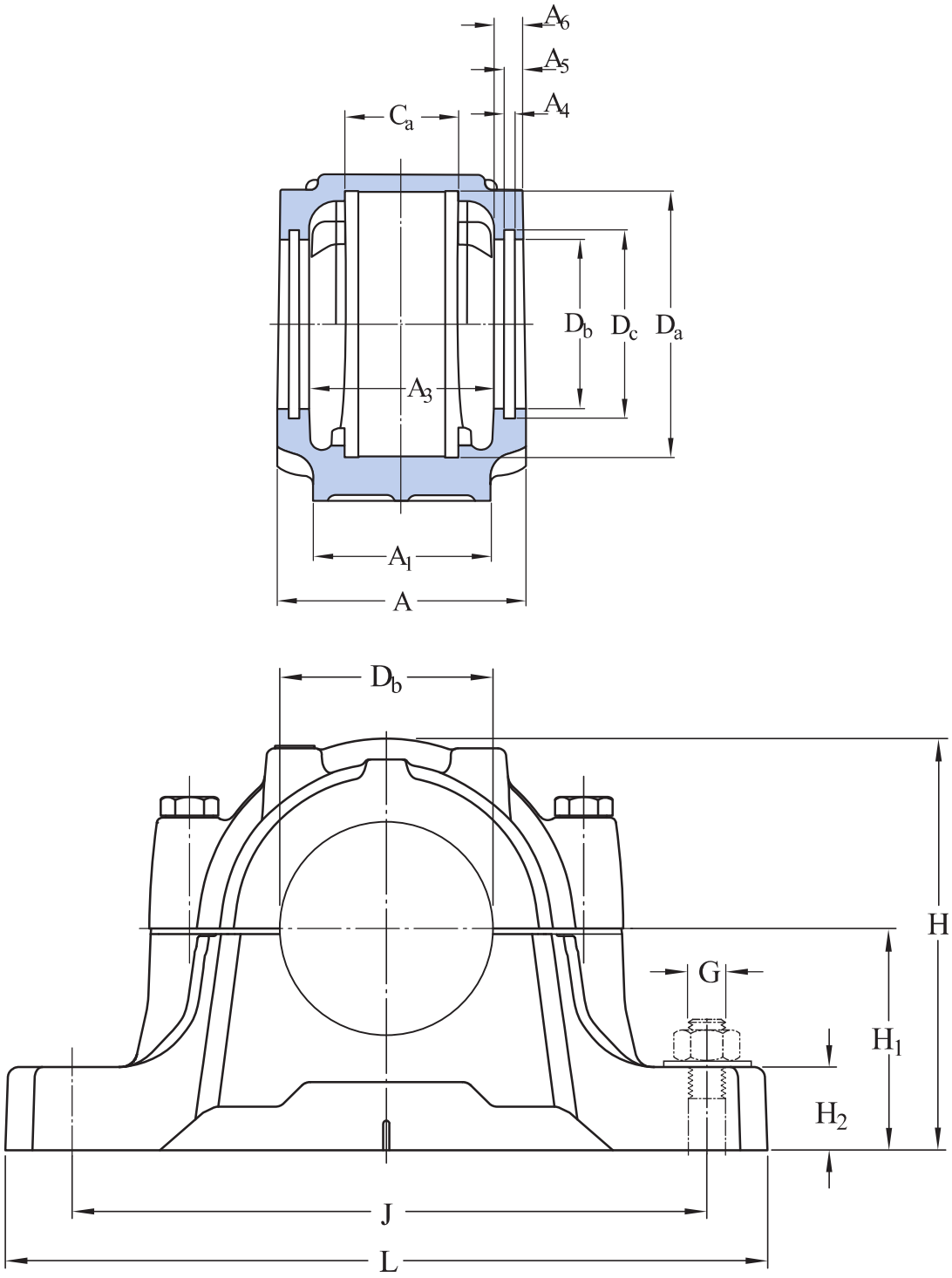

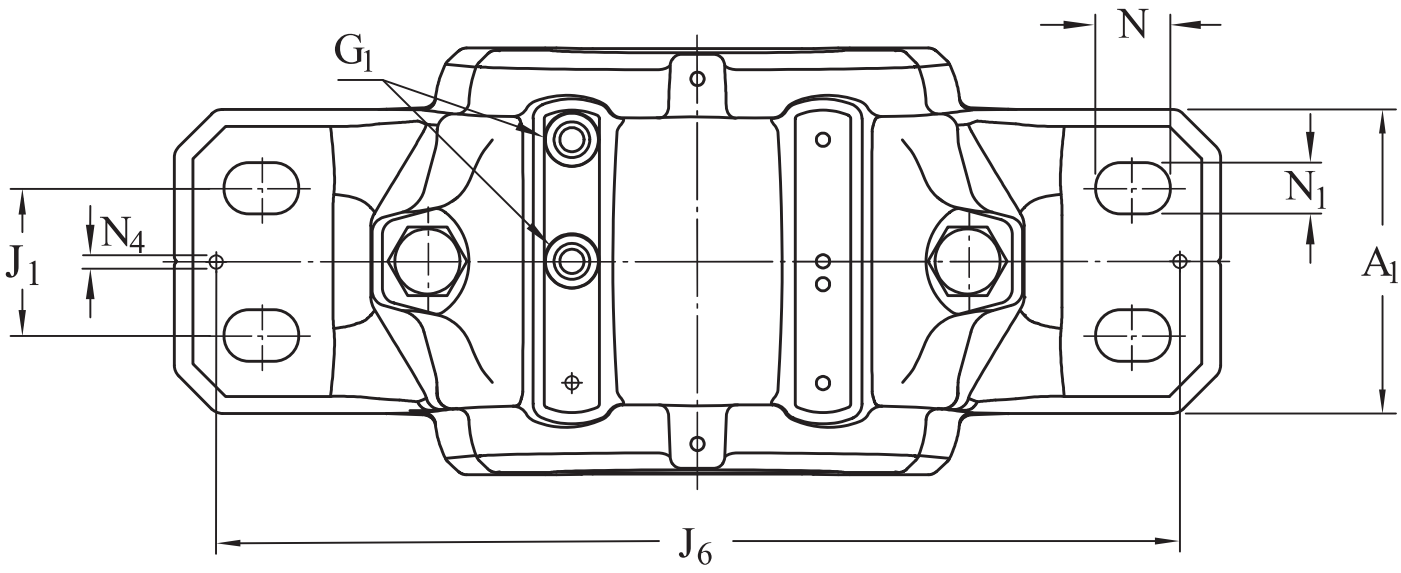


## Dimensions

### BEARING SEAT

| | | |
|---|---|---|
| $D_a$ | 160 mm | Diameter of bearing seat |
| | G7 | Tolerance class of bearing seat diameter |
| $C_a$ | 65 mm | Width of bearing seat |
| $H_1$ | 100 mm | Centre height of bearing seat |

### OUTSIDE DIMENSIONS

| | | |
|---|---|---|
| $D_b$ | 102.5 mm | Bore diameter |
| A | 143 mm | Overall width |
| $A_1$ | 100 mm | Foot width |
| $G_1$ | 1/8-27 NPSF | Thread of relubrication holes |
| H | 192 mm | Overall height |
| $H_2$ | 35 mm | Foot height |
| L | 345 mm | Overall length |
| J | 290 mm | Distance between attachment bolts |

| | | |
|---|---|---|
| $J_1$ | 50 mm | Axial distance between attachment bolts |
| N | 24 mm | Length of attachment bolt hole |
| $N_1$ | 18 mm | Width of attachment bolt hole |

## SEAL GROOVES

| | | |
|---|---|---|
| $A_3$ | 113 mm | Inside width between seal grooves |
| $A_4$ | 5 mm | Width of seal groove |
| $A_5$ | 9 mm | Distance to seal groove back face |
| $A_6$ | 13 mm | Width at bore diameter |
| $D_c$ | 111 mm | Diameter of seal groove |

## DOWEL PINS

| | | |
|---|---|---|
| $J_6$ | 317 mm | Distance between dowel pins |
| $N_4$ | max. 8 mm | Diameter of dowel pins |

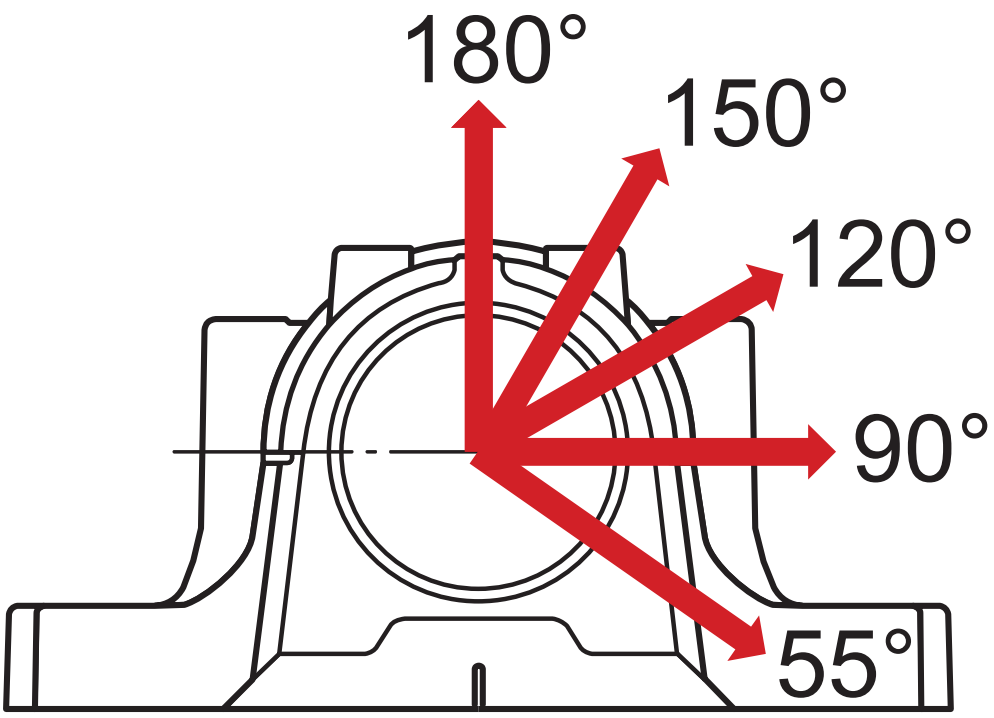

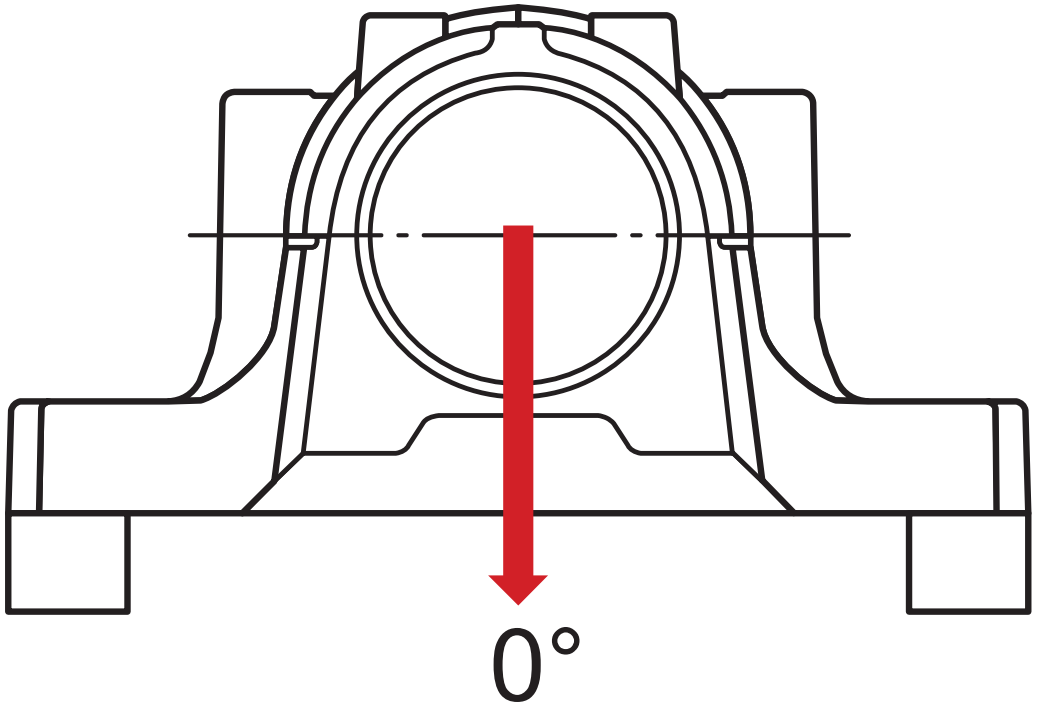


## Calculation data

### BREAKING LOADS

| | | |
|---|---|---|
| $P_{0°}$ | 430 kN | Breaking load at 0° load angle (if the housing is not supported over its entire base) |
| $P_{55°}$ | 550 kN | Breaking load at 55° load angle |
| $P_{90°}$ | 340 kN | Breaking load at 90° load angle |
| $P_{120°}$ | 250 kN | Breaking load at 120° load angle |
| $P_{150°}$ | 215 kN | Breaking load at 150° load angle |
| $P_{180°}$ | 275 kN | Breaking load at 180° load angle |
| $P_a$ | 180 kN | Breaking load, axial |

### YIELD POINTS OF CAP BOLTS

| | | |
|---|---|---|
| $Q_{120°}$ | 400 kN | Load to reach yield point at 120° load angle |
| $Q_{150°}$ | 230 kN | Load to reach yield point at 150° load angle |
| $Q_{180°}$ | 200 kN | Load to reach yield point at 180° load angle |

## Materials

| | |
|---|---|
| Housing material | Cast iron |
| Corrosion protection | Paint - in accordance with ISO 12944-2, corrosivity category C2 |

## Mounting information

| | | |
|---|---|---|
| Recommended diameter of attachment bolts | G | 16 mm |
| Recommended tightening torque for attachment bolts | | 200 N·m |
| Size of cap bolts | | M16x90 |
| Tightening torque for cap bolts | | 150 N·m |
| Initial grease fill, 20% | | 260 g |
| Initial grease fill, 40% | | 430 g |

## Included products

| | |
|---|---|
| Grease fitting | AH 1/8-27 PTF |

## More Information

### Designs and variants

- Standard housing design
- Housing variants
- Sealing solutions

### Product details

- Permissible misalignment
- Typical shaft-bearing combinations
- Locating/non-locating support
- Loads
- Temperature limits
- Permissible speed
- Lubrication
- Mounting
- Condition monitoring
- Associated products
- Ordering information
- Designation system

### Tools

- SKF Product select
- SimPro Quick
- Tool and Accessory Selector for sleeves and shafts
- LubeSelect for SKF greases
- Drive-up Method Program
- Heater selection tool
- Oil Injection Method Program

# Terms of use

By accessing and using this website / app owned and published by AB SKF (publ.) (556007-3495 · Gothenburg) (“SKF”), you agree to the following terms and conditions:

**Warranty Disclaimer and Limitation of Liability**
Although every care has been taken to assure the accuracy of the information on this website / app, SKF provides this information "AS IS" and DISCLAIMS ALL WARRANTIES, EXPRESS OR IMPLIED, INCLUDING, BUT NOT LIMITED TO, IMPLIED WARRANTIES OF MERCHANTABILITY AND FITNESS FOR A PARTICULAR PURPOSE. You acknowledge that your use of this website / app is at your sole risk, that you assume full responsibility for all costs associated with use of this website / app, and that SKF shall not be liable for any direct, incidental, consequential, or indirect damages of any kind arising out of your access to, or use of the information or software made available on this website / app.

Any warranties and representations in this website / app for SKF products or services that you purchase or use will be subject to the agreed upon terms and conditions in the contract for such product or service.

Further, for non-SKF websites / apps that are referenced in our website / app or where a hyperlink appears, SKF makes no warranties concerning the accuracy or reliability of the information in these websites / apps and assumes no responsibility for material created or published by third parties contained therein. In addition, SKF does not warrant that this website / app or these other linked websites / apps are free from viruses or other harmful elements.

**Third Party Services**
When viewing YouTube content via the SKF website(s) (i.e. using YouTube API Services), you agree to be bound by the YouTube Terms of Service.

**Copyright**
Copyright in this website / app copyright of the information and software made available on this website / app rest with SKF or its licensors. All rights are reserved. All licensed material will reference the licensor that has granted SKF the right to use the material. The information and software made available on this website / app may not be reproduced, duplicated, copied, transferred, distributed, stored, modified, downloaded or otherwise exploited for any commercial use without the prior written approval of SKF. However, it may be reproduced, stored and downloaded for use by individuals without prior written approval of SKF. Under no circumstances may this information or software be supplied to third parties.

This website /app includes certain images used under license from Shutterstock, Inc.

**Trademarks and Patents**
All trademarks, brand names, and corporate logos displayed on the website / app are the property of SKF or its licensors, and may not be used in any way without prior written approval by SKF. All licensed trademarks published on this website / app reference the licensor that has granted SKF the right to use the trademark. Access to this website / app does not grant to the user any license under any patents owned by or licensed to SKF.

**Changes**
SKF reserves the right to make changes or additions to this website / app at any time.