DOUBLE-POLE POWER ROCKER SWITCH

WR Series

Features

- Rugged construction for 2-pole, high-current applications
- Lighted and non-lighted
- Maintained-action and momentary
- Single-throw and double-throw
- Available in a variety of colors
- Mechanical life: min. 50,000 operations

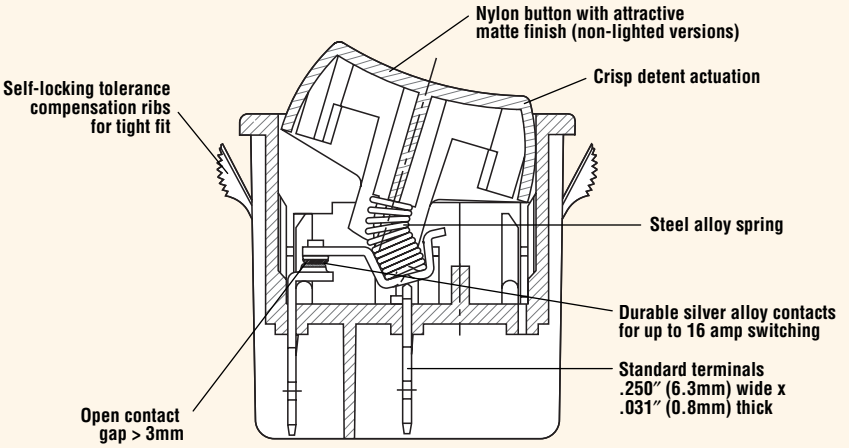

Electrical Ratings

Switch Series	EN61058 Rating	UL1054 Rating	Electrical Life at Rated Load According to VDE (Min. Operations)	Electrical Life at Rated Load According to UL (Min. Operations)
WR	16(4)A, 250V~, T125 1E4	16A, 125/250VAC; 1/4HP@125V: 3/4HP@250V	10,000	6,000



Specifications

Electrical

Dielectric Strength:	1000VAC for 1 minute
Insulation Resistance:	10^8 ohms min at 500VDC
Initial Contact Resistance:	0.020 ohms max
Temperature Rating:	-20°C to +65°C

Materials

Actuator (non-lighted):	Nylon 66 94V-2
Actuator (lighted):	Polycarbonate
Case:	Nylon 66 94V-2
Spring:	Steel Wire
Contacts:	Silver Alloy
Movable Arm:	Silver-Plated Copper Alloy
Terminals:	Tin-Plated Copper Alloy

Dimensions inches (mm)

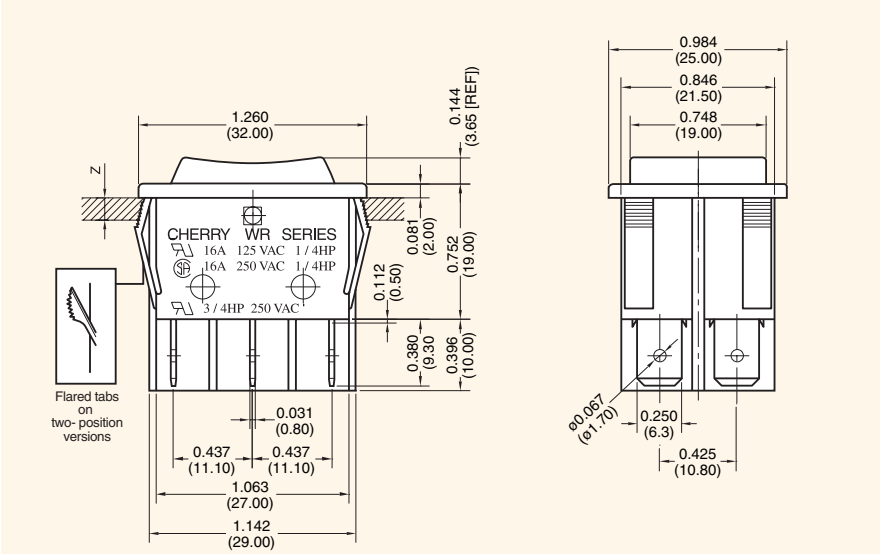

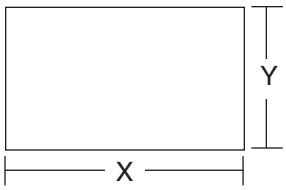

Z = Panel Thickness

Recommended Panel Cut-Out Dimensions

inches (mm)

Dim. Z	Dim. X	Dim. Y
0.030 to 0.049 (0.75 to 1.25)	1.180 (30.00)	0.867 (22.02)
0.049 to 0.079 (1.25 to 2.00)	1.190 (30.25)	0.867 (22.02)
0.079 to 0.118 (2.00 to 3.00)	1.200 (30.48)	0.867 (22.02)

Examples of Common Part Numbers and Descriptions inches (mm)

Part Number	Circuitry	Switch Function	Terminal Type	Actuator/ Housing Color	Legend Marking
WRG32F2FBBNN	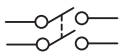	On – Off	0.250 (6.3) Quick-Connect	Black/Black	
WRG34F2HBBNN	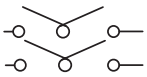	On – Off – On	0.250 (6.3) Quick-Connect	Black/Black	
WRG32F2BBRLN	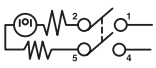	On – Off/Lighted	0.250 (6.3) Quick-Connect	Red/Black	
Boot #0015-0646					

Ordering Information

WR (Series) **G** **3** **2** **F** **2** **F** **B** **B** **N** **N**

Code	Contact Rating
G	16A, 125/250VAC: 1/4HP@125V: 3/4HP@250V (UL) 16A, 125/250VAC: 1/4HP@125/250VAC (CSA) 16(4)A, 250V~, T125 1E4 (VDE)

Code	Circuitry
2	Single-Pole
3	Double-Pole

Code	Switch Function
2	On – Off
3	On – On
4	On – Off – On
5	(On) – Off
6	(On) – On
7	(On) – Off – (On)
8	(On) – Off – On

Code	Terminal Type inches (mm)
A	0.187 (4.8) QC
F	0.250 (6.3) QC
S	0.250 (6.3) M3 Tapped Screw
T	0.250 (6.3) Solder Tag

Code	Actuator Type
2	Curve
5	Flat Actuator
7	Curve – Dual Actuator

Code	Actuator Marking
B	Blank
C	LO HI
D	OFF ON
E	O I
F	O —
G	·
H	I O II

Code	Housing Color
E	Charcoal Grey
Y	Grey
B	Black
W	White
C	Brown

Code	Actuator Color
Y	Grey
B	Black
G	Green
A	Amber
R	Red
W	White
C	Brown
E	Charcoal Grey

Code	Lighted
N	Non-Lighted
L	Lighted (Bulb 125VAC)
E	Lighted (Bulb 250VAC)
F	Lighted 5VDC Incandescent
G	Lighted 6VDC Incandescent
H	Lighted 12VDC Incandescent

Code	Splashproof
N	No Rocker Boot
S	Rocker Boot