Brand of NTN corporation

Technical data

ESPLE207

Bearing units



Grey cast housing, radial insert ball bearing with eccentric locking collar, single lip seal

KIT CONTENT

ES207G2, PLE207

VISUAL (S)

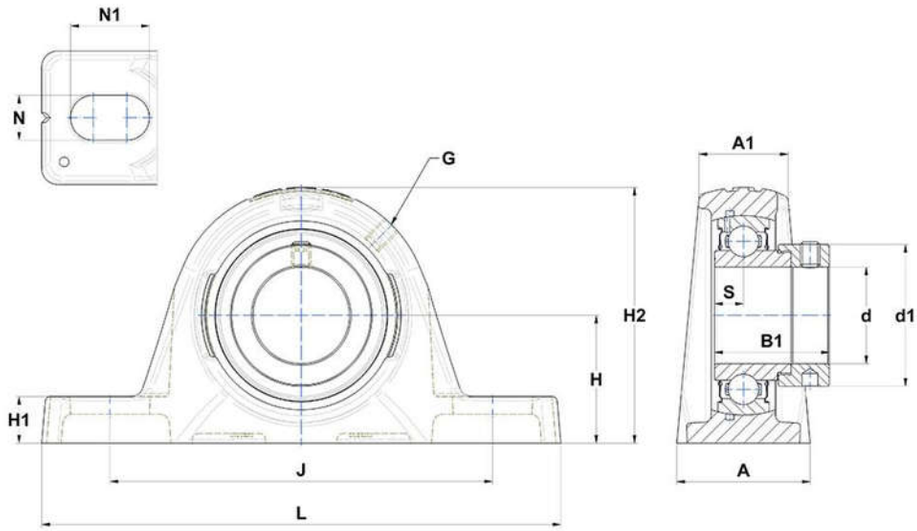

PRODUCT DEFINITION

Brand	SNR
A - Housing width	44,5 mm
A1 - Housing top width	30,5 mm
B - Width of Inner Ring	25,4 mm
d - Shaft diameter	35 mm
d1 - Outer dia of eccent. Lock. collar / nut of adapter sleeve	51,1 mm

PRODUCT DEFINITION	
G - Grease fitting	M6x1
H - Distance mounting base to centerline spheric. seating diam.	46,2 mm
H1 - Housing foot height	16 mm
H2 - Housing height	91,5 mm
J - Mounting holes distance	129 mm
L - Housing length	166 mm
N - Mounting hole dimension	14 mm
N1 - Mounting hole length	21,5 mm
S - Distance front side/bearing centre	9,5 mm

PRODUCT PERFORMANCE	
C - Dynamic load rating	25700000 mN
C0 - Static load rating	15200000 mN
Operating temperature min.	253,15 °K
Operating temperature max.	373,15 °K

OTHER FEATURES	
Mass	1,6 kg
Recommended tightening torque for set screw	11.5 N-m