# E11958

## Clean-line cylinder mounting clamp for cylinder sensors

CLAMP FOR CLEAN LINE CYL D16

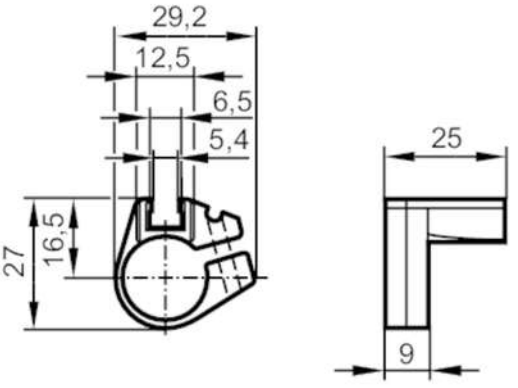


| | | |
|---|---|---|
| **Application** | | |
| Design | | for types MKT |
| **Operating conditions** | | |
| Ambient temperature | [°C] | 0...50 |
| **Mechanical data** | | |
| Weight | [g] | 8.3 |
| Materials | | mounting clamp: POM; fixture: aluminium; screw: stainless steel |
| Tightening torque | [Nm] | 0.5;  (Mounting screw) |
| Piston diameter | [mm] | 16 |
| **Accessories** | | |
| Items supplied | | socket head screws: 1 x SW2,5 |
| **Remarks** | | |
| Pack quantity | | 1 pcs. |
| **Diagrams and graphs** | | |
| Installation | | 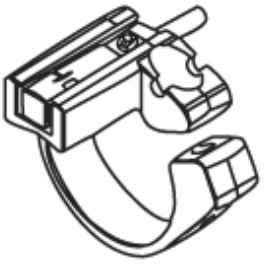 |