Product Data Sheet

ref: P1031 issue: C date: April 2012

UNISTRUT®

atkore INTERNATIONAL

P1031 - FLAT PLATE FITTING

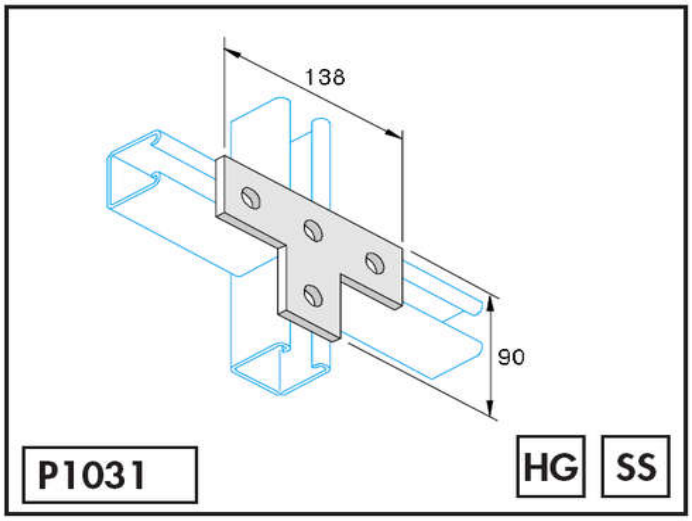

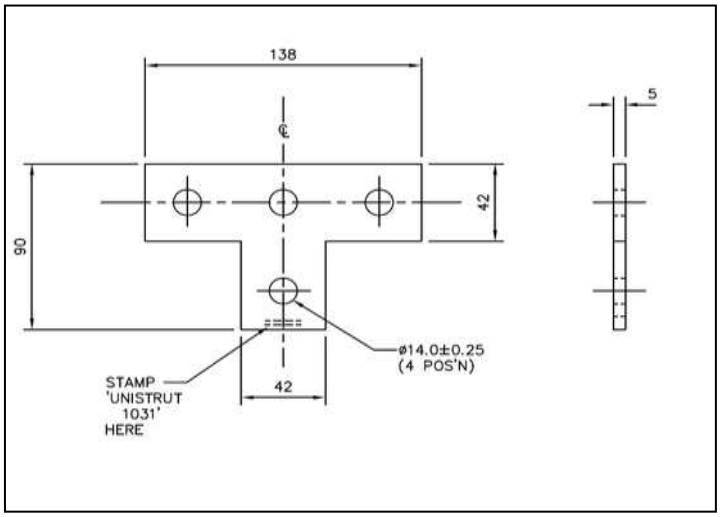

Material: Steel to BS EN 10149-2-S315MC or Q345
Stainless Steel BS EN 10088-2-1.4404+1D or 2D (S316)

Fixings:- All 14mm diameter holes use M12 grade 8.8 hex head screws with M12 - BSEN 10025 S275 or Q235 channel nuts.

Finishes: Hot Dip Galvanized - Process in accordance with BS EN ISO 1461 to a mean coating thickness (minimum) of 55µm.
Stainless Steel - Self Colour

Application:- Drawings illustrate the fitting being used with P1000.- 41mm square channel. Loading data varies due to specific application, for all queries contact Unistrut UK.

Assembly:- One piece assembly.

Part Weight:- 0.268Kg
Box Weight: 2.68Kg
No. Per Box; 10

UNISTRUT HEALTH & SAFETY DATA SHEET REF'S :

No. 001 - PLAIN STEEL, PRE-GALVANIZED, GALVANIZED AND STAINLESS STEEL COMPONENTS
No. 099 - HOT DIP GALVANIZING (CHANNEL & COMPONENTS)
No. 102 - STEEL

BS EN ISO 9001
Cert. FM825