# SONIS® EXTRA VISIBILITY HEADBAND EAR DEFENDER

EAR DEFENDERS AVAILABLE IN 4 MODELS: SONIS®1, SONIS®2,SONIS®C, SONIS®3

**TECHNICAL SPECIFICATION**

**HEARING PROTECTION**

## INSTRUCTIONS FOR USE

Pull the cups to the maximum extension of the headband.

Place the headband on top of the head and apply pressure to the headband to keep it in place.

Slide each cup upwards until the cushion encloses the ear and the seal is not broken by the ear.

## SONIS® FEATURES & BENEFITS

Visibility: Increased colleague awareness with extra visibility headband and cups

Hygienic: Hygiene kits are available for each model.

Colour coding: The Sonis® ear defenders range has been designed with a colour code system for simple selection.



## MATERIALS

ABS Cups

Foam/PET combination cushions

Stainless steel wire

Man-made textile composite headband

## DIMENSIONS OF EAR DEFENDERS

**Sonis®1:**

Depth: 100mm

Width: 145mm

Height: 193mm

Weight: 222g (Approx.)

**Sonis®2:**

Depth: 100mm

Width: 135mm

Height: 186mm

Weight: 264g (Approx.)

**Sonis®C**

Depth: 100mm

Width: 130mm

Height: 186mm

Weight: 241g (Approx.)

**Sonis®3**

Depth: 100mm

Width: 170mm

Height: 193mm

Weight: 368g (Approx.)

## LIMITATIONS OF USE

Protection will only be offered if the ear defender is fitted correctly

Ear pads may deteriorate with use and should be examined at frequent intervals

Do not apply paint, solvents, adhesives or self-adhesive labels , except in accordance with instructions from the manufacturer

The ear pads, when in contact with the skin may cause allergic reactions to susceptible individuals

If this occurs leave the hazard area, remove the ear defender and seek medical advice

If the ear defender is to be worn for long periods the noise level must be reduced to 80dB

Before selection of a suitable ear defender a noise survey should be carried out

Spectacle frames and hair between the ear pads and the head may affect the performance of the ear defender

Hearing Protection should be used in accordance with the local legislation in force at time of use



## CONFORMITY

Conforms to EN 352-1:2002

EC Certificate Number 662532

Kitemark Number KM 662534

# SONIS® EXTRA VISIBILITY HEADBAND EAR DEFENDER

EAR DEFENDERS AVAILABLE IN 4 MODELS: SONIS®1, SONIS®2,SONIS®C, SONIS®3

**TECHNICAL SPECIFICATION**

**HEARING PROTECTION**

## DIMENSIONS OF OUTER PACKAGING

**Sonis®1, Sonis®2, Sonis®C:**

Quantity: 10

Weight: 3.7kg (Approx.)

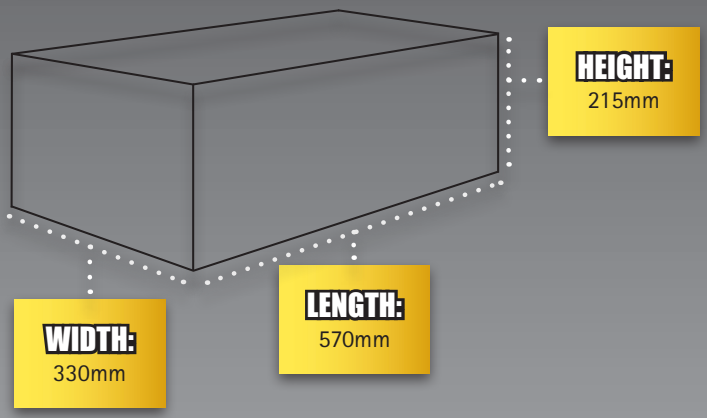


## DIMENSIONS OF OUTER PACKAGING

**Sonis®3:**

Quantity: 10

Weight: 9.7kg (Approx.)

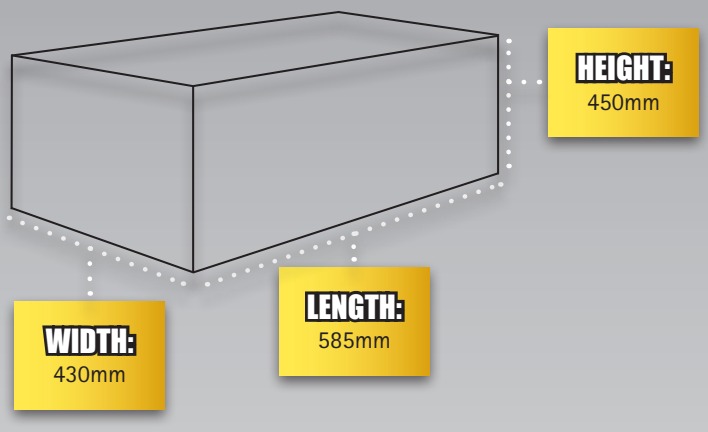


## CLEANING & MAINTENANCE

Clean with soap and warm water and dry with a soft cloth

Do not use chemical or abrasive cleaners

Store out of direct sunlight, away from chemicals and not exposed to extremes of temperature

## PERFORMANCE

SONIS®1 EAR DEFENDERS

| Frequency (Hz) | 63 | 125 | 250 | 500 | 1000 | 2000 | 4000 | 8000 |
|---|---|---|---|---|---|---|---|---|
| Mean Attenuation (dB) | 13.9 | 13.1 | 15.4 | 25.5 | 31.9 | 32.8 | 35.4 | 36.9 |
| Standard Deviation (dB) | 3.7 | 1.9 | 2.4 | 2.1 | 3.8 | 3.7 | 2.7 | 3.1 |
| Assumed Protection (dB) | 10.2 | 11.2 | 13.0 | 23.4 | 28.1 | 29.0 | 32.7 | 33.8 |
| | H=31 | | M=24 | | L=16 | | SNR=27 | |

SONIS®2 EAR DEFENDERS

| Frequency (Hz) | 63 | 125 | 250 | 500 | 1000 | 2000 | 4000 | 8000 |
|---|---|---|---|---|---|---|---|---|
| Mean Attenuation (dB) | 17.8 | 16.9 | 20.4 | 30.5 | 39.4 | 35.0 | 38.3 | 36.9 |
| Standard Deviation (dB) | 3.3 | 1.8 | 2.7 | 1.9 | 4.2 | 3.3 | 3.4 | 3.3 |
| Assumed Protection (dB) | 14.4 | 15.1 | 17.7 | 28.6 | 35.1 | 31.7 | 34.8 | 33.5 |
| | H=34 | | M=29 | | L=21 | | SNR=31 | |

SONIS®C EAR DEFENDERS

| Frequency (Hz) | 63 | 125 | 250 | 500 | 1000 | 2000 | 4000 | 8000 |
|---|---|---|---|---|---|---|---|---|
| Mean Attenuation (dB) | 18.0 | 18.4 | 20.4 | 28.8 | 40.0 | 36.3 | 42.4 | 43.1 |
| Standard Deviation (dB) | 3.3 | 2.2 | 1.8 | 1.6 | 2.9 | 4.4 | 2.2 | 3.4 |
| Assumed Protection (dB) | 14.7 | 16.2 | 18.6 | 27.1 | 37.1 | 31.8 | 40.2 | 39.7 |
| | H=35 | | M=29 | | L=21 | | SNR=32 | |

SONIS®3 EAR DEFENDERS

| Frequency (Hz) | 63 | 125 | 250 | 500 | 1000 | 2000 | 4000 | 8000 |
|---|---|---|---|---|---|---|---|---|
| Mean Attenuation (dB) | 21.5 | 22.1 | 28.4 | 38.8 | 45.0 | 40.3 | 39.5 | 40.6 |
| Standard Deviation (dB) | 3.4 | 2.5 | 2.0 | 2.3 | 4.9 | 3.6 | 3.3 | 2.7 |
| Assumed Protection (dB) | 18.1 | 19.7 | 26.4 | 36.5 | 40.1 | 36.7 | 36.2 | 37.9 |
| | H=37 | | M=35 | | L=27 | | SNR=37 | |