finder®
SWITCH TO THE FUTURE

Modular step relays 16 A



- Automation for blinds, grilles and shutters
- Lighting control in corridors (for hotels, offices and hospitals)
- Bedroom light control
- Living room light control

20
SERIES

FINDER reserves the right to alter characteristics at any time without notice. FINDER assumes no liability for damage to persons or property, caused as a result of the incorrect use or application of its products.

1 or 2 Pole 16 A Step relays for direct 35 mm rail (EN 60715) mounting

- 17.4 mm wide
- Test button with mechanical indicators
- Choice of 7 switching sequences
- AC coils and DC coils
- Identification label
- Possible to connect illuminated push buttons with the additional part 026.00
- 35 mm rail (EN 60715) mount
- Cadmium free contact material

20.21/22/24/26/27/28/23
Screw terminal



For UL ratings see:
"General technical information" page V

For outline drawing see page 5

	20.21	20.22, 24, 26, 27, 28	20.23
			
	• Single phase switch 1 NO (SPST-NO) • 35 mm rail (EN 60715) mount	• Double phase switch • 35 mm rail (EN 60715) mount	• Double phase switch 1NO+1NC (SPST-NO+SPST-NC) • 35 mm rail (EN 60715) mount
	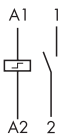	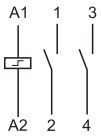	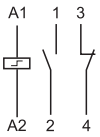
Contact specification			
Contact configuration	1 NO (SPST-NO)	2 NO (DPST-NO)	1NO+1NC (SPST-NO+SPST-NC)
Rated current/Maximum peak current A	16/30	16/30	16/30
Rated voltage/ Maximum switching voltage V AC	250/400	250/400	250/400
Rated load AC1 VA	4000	4000	4000
Rated load AC15 (230 V AC) VA	750	750	750
Nominal lamp rating:			
230 V incandescent/halogen W	2000	2000	2000
fluorescent tubes with electronic ballast W	1000	1000	1000
fluorescent tubes with electromechanical ballast W	750	750	750
CFL W	400	400	400
230 V LED W	400	400	400
LV halogen or LED with electronic ballast W	400	400	400
LV halogen or LED with electromechanical ballast W	800	800	800
Minimum switching load mW (V/mA)	1000 (10/10)	1000 (10/10)	1000 (10/10)
Standard contact material	$AgSnO_2$	$AgSnO_2$	$AgSnO_2$
Coil specification			
Nominal voltage (U_N) V AC (50/60 Hz)	8 - 12 - 24 - 48 - 110 - 120 - 230 - 240		
V DC	12 - 24 - 48 - 110	12 - 24 - 48 - 110	12 - 24 - 48 - 110
Rated power AC/DC VA (50 Hz)/W	6.5/5	6.5/5	6.5/5
Operating range AC	(0.85…1.1)U_N (50 Hz)/(0.9…1.1)U_N (60 Hz)		
DC	(0.9…1.1)U_N	(0.9…1.1)U_N	(0.9…1.1)U_N
Technical data			
Mechanical life AC/DC cycles	$300 \cdot 10^3$	$300 \cdot 10^3$	$300 \cdot 10^3$
Electrical life at rated load in AC1 cycles	$100 \cdot 10^3$	$100 \cdot 10^3$	$100 \cdot 10^3$
Minimum/Maximum impulse duration	0.1 s/1 h (according to EN 60669)	0.1 s/1 h (according to EN 60669)	0.1 s/1 h (according to EN 60669)
Insulation between coil and contacts (1.2/50 µs) kV	4	4	4
Ambient temperature range °C	–40…+40	–40…+40	–40…+40
Protection category	IP 20	IP 20	IP 20
Approvals (according to type)	CE EAC RINA cULus		

K

Ordering information

Example: 20 series relay, 35 mm rail (EN 60715) mount, double phase switch, 2 NO 16 A contacts, coil rated at 12 V DC, $AgSnO_2$ contacts.

2 0	.	2	2	.	9	.	0 1 2	.	4	0	0	0

Series

Type
2 = 35 mm rail (EN 60715) mount

No. of poles
1 = Single phase switch 1 NO (SPST-NO)
2 = Double phase switch 2 NO (DPST-NO)
3 = Double phase switch 1 NC+ 1 NO (SPST-NO+SPST-NC)
4 = 4 sequence double phase switch 2 NO (DPST-NO)
6 = 3 sequence double phase switch 2 NO (DPST-NO)
7 = 3 sequence double phase switch 2 NO (DPST-NO)
8 = 4 sequence double phase switch 2 NO (DPST-NO)

Coil version
8 = AC (50/60 Hz)
9 = DC

Coil voltage
See coil specifications

Contact material
0 = AgNi
4 = $AgSnO_2$

Technical data

Insulation					
Dielectric strength					
between supply and contacts	V AC	3500			
between open contacts	V AC	2000			
between adjacent contacts	V AC	2000			
Other data					
Power lost to the environment with rated current and coil deenergised	W	1.3 (20.21, 20.23, 20.28)		2.6 (20.22, 20.24, 20.26, 20.27)	
Screw torque	Nm	0.8		0.8	
Max. wire size		**Coil terminals**		**Contact terminals**	
		solid cable	stranded cable	solid cable	stranded cable
	mm^2	1 x 4 / 2 x 2.5	1 x 2.5 / 2 x 2.5	1 x 6 / 2 x 4	1 x 4 / 2 x 2.5
	AWG	1 x 12 / 2 x 14	1 x 14 / 2 x 14	1 x 10 / 2 x 12	1 x 12 / 2 x 14

If the coil is operated for a prolonged period of time, adequate ventilation of the relays must be provided - suggested gap of 9 mm between adjacent relays.

Coil specifications

DC version data

Nominal voltage U_N	Coil code	Operating range U_{min}	Operating range U_{max}	Resistance R	Consumption I at U_N
V		V	V	Ω	mA
12	**9**.012	10.8	13.2	27	440
24	**9**.024	21.6	26.4	105	230
48	**9**.048	43.2	52.8	440	110
110	**9**.110	99	121	2330	47

AC version data

Nominal voltage U_N	Coil code	Operating range U_{min}	Operating range U_{max}	Resistance R	Consumption I at U_N (50 Hz)
V		V	V	Ω	mA
8	**8**.008	6.8	8.8	4	800
12	**8**.012	10.2	13.2	7.5	550
24	**8**.024	20.4	26.4	27	275
48	**8**.048	40.8	52.8	106	150
110	**8**.110	93.5	121	590	64
120	**8**.120	102	132	680	54
230	**8**.230	192	253	2500	28
240	**8**.240	204	264	2700	27.5

Type	Number of steps	Sequence 1	2	3	4
20.21	2				
20.22	2				
20.23	2				
20.24	4				
20.26	3				
20.27	3				
20.28	4				

X-2017, www.findernet.com

Wiring diagrams

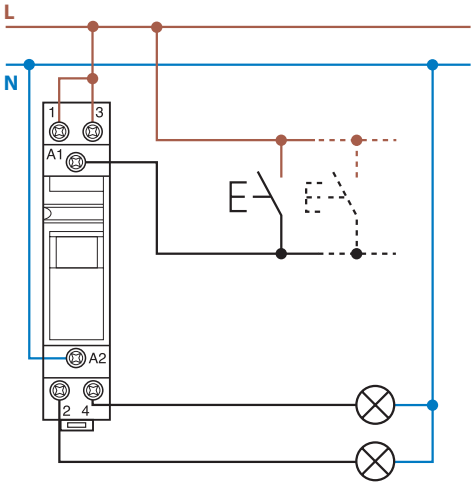

Example: 230 V AC supply voltage.

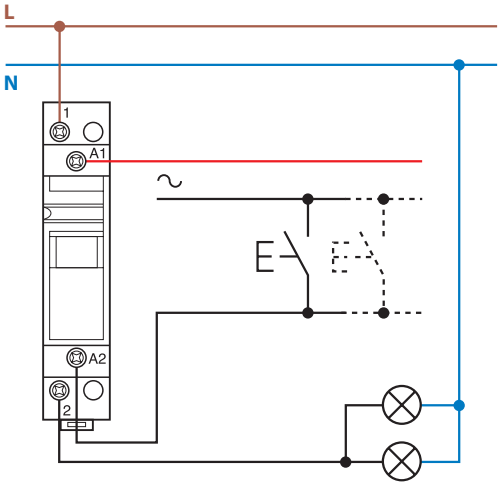

Example: 24 V AC supply voltage.

Outline drawings

20.21
Screw terminal



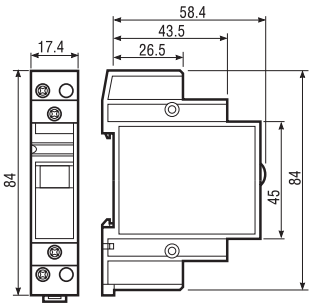

20.22/24/26/27/28
Screw terminal



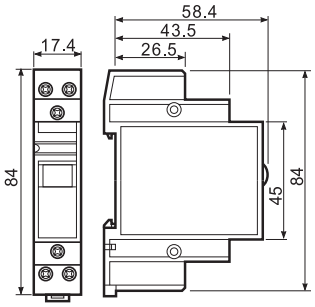

20.23
Screw terminal



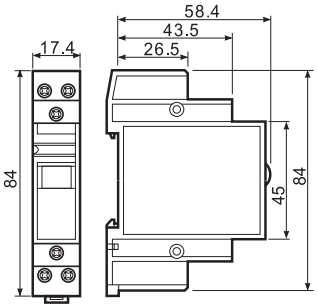

K

X-2017, www.findernet.com

Accessories

Module for use with illuminated push-buttons

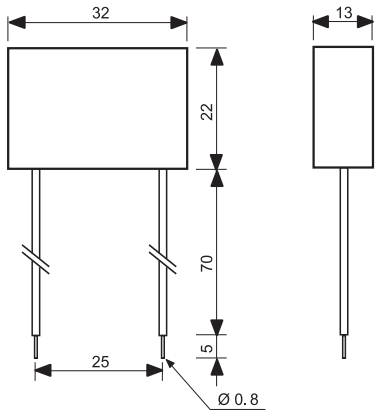

Type 026.00
Sealed construction, 7.5 cm insulated flexible wire termination.

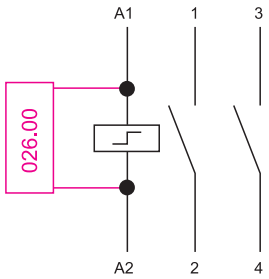

Example of wiring diagram of type 026.00
This module is necessary when using between 1 and a maximum of 15 illuminated push buttons in the coil circuit (Each 1.5 mA max, 230 V AC). It must be connected in parallel to the coil of the relay.



020.01

Adaptor for panel mounting, 17.5 mm wide	020.01



020.24

Sheet of marker tags, plastic, 24 tags, 9 x 17 mm	020.24



022.09

Separator for rail mounting, plastic, 9 mm wide	022.09

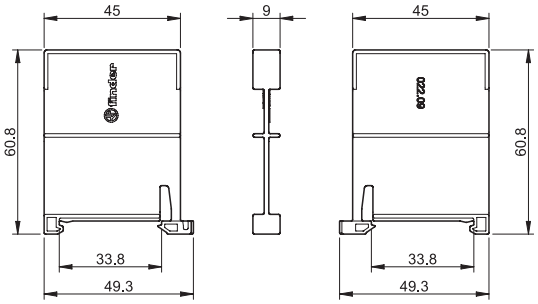

K

X-2017, www.findernet.com