Brand of NTN corporation

Technical data

BBET16UU

Super ball bushings



VISUAL (S)

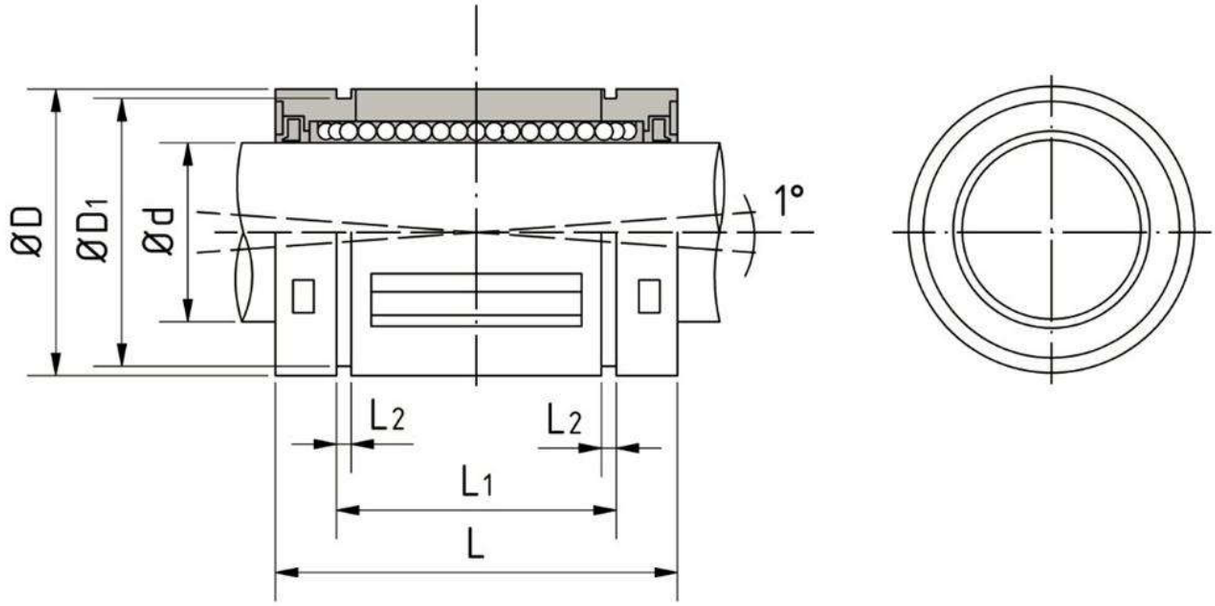

PRODUCT DEFINITION

Brand	SNR
Design type	BBET
Ball bushings category	Super ball bushings, closed
Standard	ISO dimension
Number of seals	2
Material outer cylinder or steel segments	100Cr6
Material Cage	PA
Initial greasing	Non/No
Re-lubricable	Oui/Yes

BBET16UU
Super ball bushings

PRODUCT DEFINITION	
d - Internal diameter	16 mm
d - Internal diameter tolerance	0,009/-0,001
D - External diameter	26 mm
L - Length	36 mm
L - Length tolerance	0,2/-0,2
L1	24,9 mm
L1 tolerance	0/-0,2
D1 - Diameter	24,9 mm
L2	1,3 mm
Diameter F H11	3 mm
J	1 mm
Number of ball rows	5
Mass	0,043 kg

PRODUCT PERFORMANCE	
Cmin	1,25 kN
Cmax	1,829 kN
C0min	1,55 kN
C0max	2,268 kN
Tmin - Min operating temperature	-20 °C
Tmax - Max operating temperature	80 °C

ESHOPDONOTDISPLAY	
Reference	BBET16UU
Image	BBET_1.JPG, BBET_3.JPG

ESHOPDONOTDISPLAY	
Send to Eshop	Yes
Send to Paper Catalog	Yes
Tracepart	Oui/Yes