PM1704

Flush pressure sensor

PM-010-REA01-E-ZVG/US

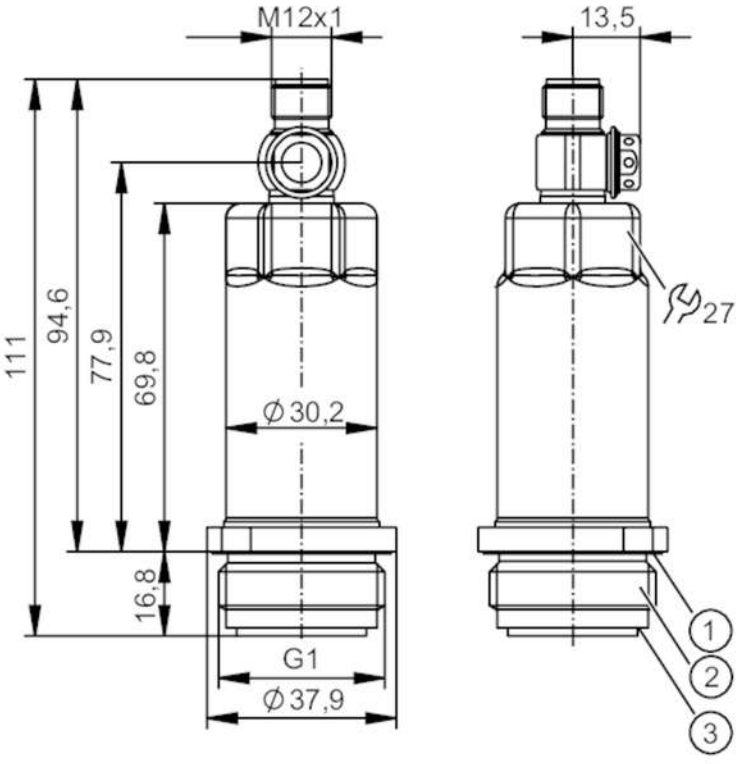

1 groove with sealing ring (DIN EN ISO 1179-2)
2 external thread G1 (Aseptoflex Vario)
3 groove for sealing ring

3A ACS CE CRN cULus LISTED EC 1935/2004 EHEDG Certified FCM FDA IO-Link Reg31 UKCA

Product characteristics				
Number of inputs and outputs	Number of digital outputs: 1; Number of analogue outputs: 1			
Measuring range	-1...10 bar	-14.5...145 psi	-100...1000 kPa	-0.1...1 MPa
Process connection	threaded connection G 1 external thread Aseptoflex Vario			
Application				
Special feature	Gold-plated contacts			
Measuring element	ceramic-capacitive pressure measuring cell			
Temperature monitoring	no			
Application	flush mountable for the food and beverage industry			
Media	viscous media and liquids with suspended particles; liquids and gases			
Medium temperature [°C]	-25...150			
Min. bursting pressure	150 bar	2175 psi	15 MPa	
Pressure rating	50 bar	725 psi	5 MPa	
Vacuum resistance [mbar]	-1000			
Type of pressure	relative pressure; vacuum			
No dead space	yes			
MAWP (for applications according to CRN) [bar]	50			
Electrical data				
Operating voltage [V]	18...30 DC			

PM1704

Flush pressure sensor

PM-010-REA01-E-ZVG/US

Min. insulation resistance	[MΩ]	100; (500 V DC)
Protection class		III
Reverse polarity protection		yes
Integrated watchdog		yes
2-wire		
Current consumption	[mA]	3.5...21.5
Power-on delay time	[s]	1
3-wire		
Current consumption	[mA]	< 45
Power-on delay time	[s]	0.5

Inputs / outputs

Number of inputs and outputs	Number of digital outputs: 1; Number of analogue outputs: 1

Outputs

Total number of outputs		2
Output signal		analogue signal; IO-Link; (configurable)
Number of digital outputs		1; (IO-Link)
Number of analogue outputs		1
Analogue current output	[mA]	4...20; (scalable)
Max. load	[Ω]	700; (Ub = 24 V; (Ub - 9 V) / 21.5 mA)
Short-circuit proof		yes
Overload protection		yes

Measuring/setting range

Measuring range	-1...10 bar	-14.5...145 psi	-100...1000 kPa	-0.1...1 MPa
Analogue start point	-1...8 bar	-14.5...116 psi		-0.1...0.8 MPa
Analogue end point	1...10 bar	14.5...145 psi		0.1...1 MPa
In steps of	0.005 bar	0.1 psi		0.0005 MPa
Factory setting	ASP = 0.0 bar	AEP = 10.0 bar		

Accuracy / deviations

Repeatability	[% of the span]	< ± 0,1; (with temperature fluctuations < 10 K; Turn down 1:1)
Characteristics deviation	[% of the span]	< ± 0,2; (linearity incl. hysteresis and repeatability, limit value setting to DIN EN IEC 62828-1)
Linearity deviation	[% of the span]	< ± 0,15; (Turn down 1:1)
Hysteresis deviation	[% of the span]	< ± 0,15; (Turn down 1:1)
Long-term stability	[% of the span]	< ± 0,1; (Turn down 1:1; per year)

Total deviation over temperature range	**Temperature range**	**total deviation**
	-25...15 °C	Characteristics deviation ± 0,05 % of the span / 10 K
	15...80 °C	Characteristics deviation
	80...150 °C	Characteristics deviation ± 0,1 % of the span / 10 K

Notes on the accuracy / deviation	for further details see section Diagrams and graphs

PM1704

Flush pressure sensor

PM-010-REA01-E-ZVG/US

Response times			
Damping for the analogue output dAA	[s]	0...4	
2-wire			
Step response time analogue output	[ms]	30	
3-wire			
Step response time analogue output	[ms]	7	
Interfaces			
Communication interface		IO-Link	
Transmission type		COM2 (38,4 kBaud)	
IO-Link revision		1.1	
SDCI standard		IEC 61131-9	
Profiles		Digital Measuring Sensor (0x000A), Identification and Diagnosis (0x4000)	
SIO mode		no	
Required master port type		A	
Process data analogue		3	
Min. process cycle time	[ms]	3.2	
IO-Link resolution pressure	[bar]	0.002	
IO-Link process data (cyclical)		**function**	**bit length**
		pressure	16
		device status	4
IO-Link functions (acyclical)		application specific tag; internal temperature	
Supported DeviceIDs		**Type of operation**	**DeviceID**
		default	662
Operating conditions			
Ambient temperature	[°C]	-25...80	
Storage temperature	[°C]	-40...100	
Protection		IP 67; IP 68; IP 69K	
Tests / approvals			
EMC		DIN EN 61000-6-2	
		DIN EN 61000-6-3	
Shock resistance		DIN EN 60068-2-27	50 g (11 ms)
Vibration resistance		DIN EN 60068-2-6	20 g (10...2000 Hz)
MTTF	[years]	323	
Note on approval		factory certificate available as download at www.factory-certificate.ifm	
UL approval		UL Approval no.	J021
Mechanical data			
Weight	[g]	307.75	
Housing		cylindrical	
Dimensions	[mm]	Ø 30.2 / L = 111	
Materials		stainless steel (316L/1.4404); PBT	
Materials (wetted parts)		ceramics (99.9 % Al2O3); stainless steel (316L/1.4435); surface characteristics: Ra < 0,4 / Rz 4; PTFE	
Min. pressure cycles		100 million	

PM1704

Flush pressure sensor

PM-010-REA01-E-ZVG/US

Tightening torque	[Nm]	35
Process connection		threaded connection G 1 external thread Aseptoflex Vario

Remarks

Pack quantity	1 pcs.

Electrical connection

Connector: 1 x M12; coding: A; Contacts: gold-plated



Connection

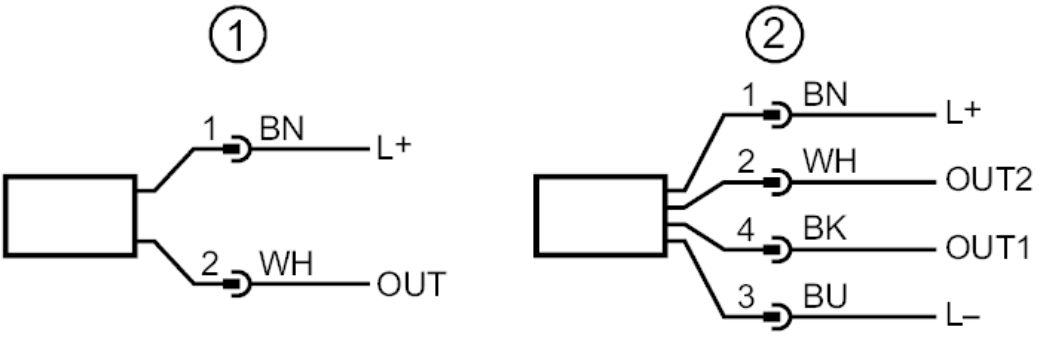

1	connection for 2-wire operation (analogue)
2	connection for 3-wire operation (analogue / IO-Link) OUT1 : IO-Link OUT2 : analogue output

PM1704

Flush pressure sensor

PM-010-REA01-E-ZVG/US

Diagrams and graphs

ambient temperature influence on the accuracy

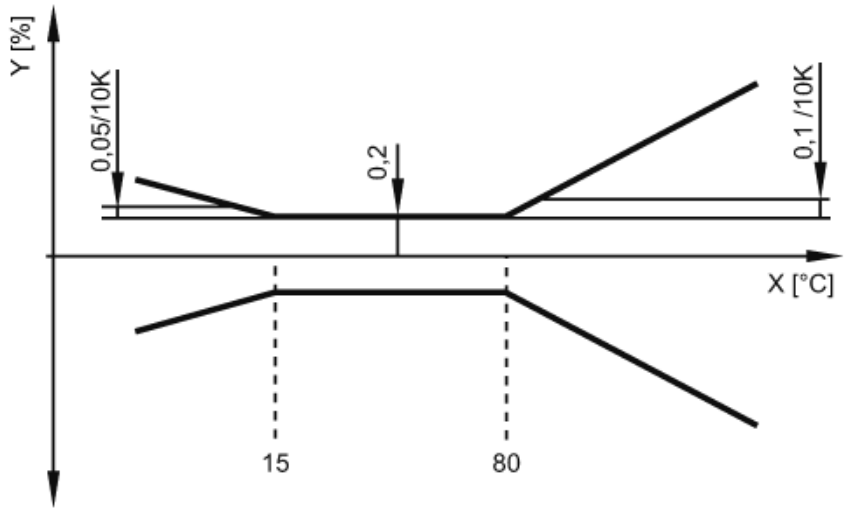

X temperature

Y total deviation