Brand of NTN corporation

Technical data

UKFC210H

Bearing units



Grey cast housing, radial insert ball bearing with adapter sleeve,seal with slinger

KIT CONTENT

UK210G2H, FC210

VISUAL (S)

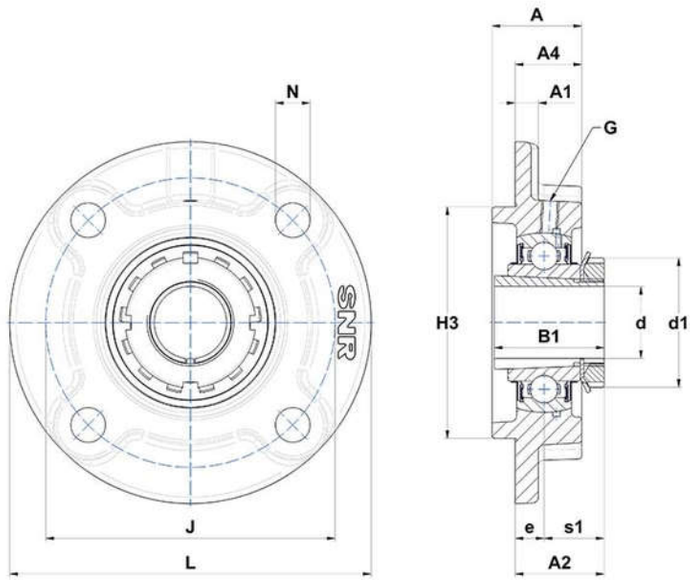

PRODUCT DEFINITION

Brand	SNR
A - Housing height	40 mm
A1 - Housing foot height / flange height	14 mm
A2 - Total height from mounting surface	37,5 mm
A4 - Housing height from mounting surface	28 mm
B - Width of Inner Ring	31 mm

NTN Europe
1 rue des Usines · BP 2017 · 74010 Annecy Cedex · France · Tel. +33 (0)4 50 65 30 00
S.A. au capital de 322 639 919 € · RCS ANNECY B 325 821 072 · Id. Fiscale : FR 48 325 821 072
SIRET 325 821 072 00015 · Code APE 2815 Z · Code NACE 28.15

UKFC210H
Bearing units

PRODUCT DEFINITION	
B1 - Overall width Inner Ring	55 mm
d - Shaft diameter	45 mm
d1 - Outer dia of eccent. Lock. collar / nut of adapter sleeve	70 mm
e - Distance mounting surface to bearing center	10 mm
G - Grease fitting	M6x1
H3 - Centering dia	110 mm
J - Mounting holes distance	138 mm
L - Housing width / diameter	165 mm
N - Mounting hole dimension	16 mm
s1 - Distance nut to middle of bearing raceway	27,5 mm

PRODUCT PERFORMANCE	
C - Dynamic load rating	35100000 mN
C0 - Static load rating	23200000 mN
Operating temperature min.	253,15 °K
Operating temperature max.	373,15 °K

OTHER FEATURES	
Mass	2,97 kg
Adapter sleeve designation	H2310