

Version of 07/06/2026

ULCOS 900

Universal Transmitter





Universal power supply



Sensor power supply

JM Concept - 18 Chemin des Tard-Venus - 69530 Brignais - France
Contact : +33 (0) 4 72 318 318 - jmc@jmconcept.com
www.jmconcept.com

Presentation

The ULCOS 900 from JM Concept is a universal industrial signal converter designed for signal conditioning, measurement, and conversion of sensor signals for automation and supervisory control systems. It accepts a wide variety of input signals, including current, voltage, thermocouples, RTD sensors, resistances, and NTC/PTC sensors, providing a high degree of versatility. Physical quantities are converted with 16-bit resolution on both the input and output sides, ensuring a high level of accuracy and measurement resolution.

The device provides analog current and voltage outputs, as well as alarm functions through relay contacts, while ensuring galvanic isolation suitable for industrial environments. It features a universal power supply, allowing operation from both AC and DC sources. The product is available in both a standard version and a SIL2-certified version for applications requiring a higher level of functional safety.

Its architecture is based on several independent functional blocks, including the power supply, input stage, output stage, microcontroller, communication functions, and display.

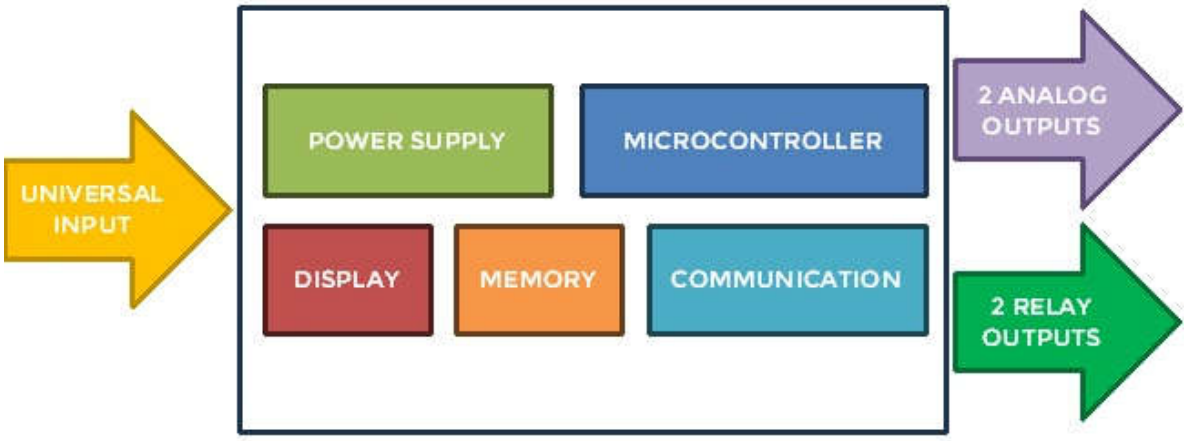

This modular design improves the robustness, maintainability, and flexibility of the equipment. Configuration can be performed either through the front display or dedicated software, allowing measurement and processing parameters to be easily adapted to application requirements.

Thanks to its versatility, accuracy, and robustness, the ULCOS 900 is used in a wide range of industrial sectors, including process industries, energy production and distribution, water treatment, test benches, and instrumentation systems.

ULCOS 900 is guaranteed for 10 years

Range

Transmitter	Input	Outputs			Communication
		Number of Analog		Number of Relay	
	Universal	1	2	2	Indirect USB
ULCOS 920D0	✓			✓	✓
ULCOS 900D1	✓	✓			✓
ULCOS 920D2	✓		✓	✓	✓
ULCOS 920D0SIL	✓			✓	✓
ULCOS 900D1SIL	✓	✓			✓
ULCOS 920D2SIL	✓		✓	✓	✓

SIL Products
When SIL mode is activated, USB communication is disable.

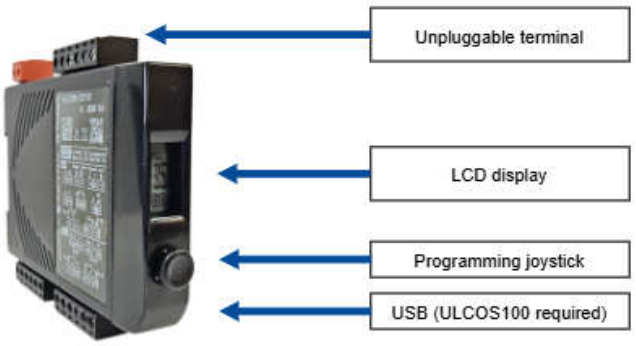

Device codification

ULCOS product name example : ULCOS 920D2SIL

Family	Input signal type	Number of relays	Input characteristics	Additional specification	Number of output	Option
ULCOS	9 : Universal	0 2	0 : None	D : Swappable plug In and Out	0 1 2	Nothing : None SIL : SIL2 certified

Serial number

Serial number example : BC1234

Year	Month	Product number within the month
A-Z	A-L	4000-…

The product serial number does not directly trace the firmware version or whether the product is SIL certified. However, each product is tested before shipment to the customer according to its label. A SIL or non-SIL program is launched depending on the model indicated on the product label. A non-SIL product cannot be validated with a SIL label.

Factory settings

Input	**Input type**			**Input gauge**		
	Current			From 4 to 20mA		
Display	**Function**	**Minimum**	**Maximum**	**Resolution**	**Comma position**	**Offset**
	Linear	0	1000	1	0000	0
Outputs	**Display**			**Output type**		
	0-1000			4-20mA		
Relays (2RT)	**Alarm**	**Threshold**	**Storage**	**On alarm**	**Hysteresis**	
	High	5000	No	Indication is on Coil is energized	low/ zero amplitude	

- SIL Mode: Disabled
- SIL password: no default password

Other settings on demand

> **SIL Products**
> Firmware version : 2.00

Inputs - Outputs

Input gauges

Current (continuous)	Standard scales: 0-20mA ; 4-20mA Adjustable scales: From 0 to 22mA
Voltage (continuous)	Standard scales: 0-100mV ; 0-10V Adjustable scales: From 0 to +110mV, from 0 to 11V
Resistance 2 wires	1KΩ, 5KΩ, 10KΩ, 50KΩ
Special table for NTC and PTC	1KΩ, 5KΩ, 10KΩ, 50KΩ Unit: °C or F Programmable with **IXLOG** software
Thermocouple	Standard scales: J, K, T, B, R, S, E, NiMo, N, W3/D, W5/C, P Adjustable scales: J, K, T, B, R, S, E, NiMo, N, W3/D, W5/C, P
PT 100 – PT 1000 2 or 3 wires	Standard scales: -210°C / 660°C Adjustable scales: -210°C / 800°C
Potentiometer	From 470Ω to 100KΩ Adjustable scales: From 0% to 110%
Sensor supply	Sensor 2 wires 19V - 26mA max

SIL Products
If the sensor power supply is used, it must be externally monitored to ensure that it remains within the 18V to 24V range, so that the product can continue to perform its safety function.

Output gauges

Current Output	**ULCOS** Standard scales: 0-20mA ; 4-20mA Adjustable scales: From 0 to 22mA	**ULCOS SIL** Standard scales: 4-20mA
Voltage Output	**ULCOS** Standard scales: 0-10V Adjustable scales: From 0 to 11V	**ULCOS SIL** Standard scales: 1-10V
Output Relay	Relay SPDT - Max current: 500mA Max voltage: 250Vac/220Vdc - Max power: 60Vac/30W	
Communication	USB cable (ULCOS 100) on front panel	

Characteristics

Display	
Type	Non-backlit LCD
Color	Green
Number of characters	4
Numbers of lines	4
Programming joystick	5 positions
Input characteristics	
Current input impedance	5.5Ω
10V voltage input impedance	>1MΩ
mV voltage and thermocouple input impedance	10MΩ
Voltage resistance 2 wires, RTD and potentiometer input impedance	Current: <1mA
Output characteristics	
Permissible impedance on the current output	<700Ω
Permissible impedance on the voltage output	>700Ω
Isolation	
Supply / Input-Output 1-Output 2-USB	4200Vrms, 50Hz, 1mn
Input / Output 1-Output 2	2500Vrms, 50Hz, 1mn
Input / USB	Without
Output 1-Output 2 / USB	2500Vrms, 50Hz, 1mn
Output 1 / Output 2	Without
Auxiliary source	
Voltage supply	22-240Vdc or 90-230Vac 50/60Hz

General characteristics	
Precision class*	0.1
Input analog/digital conversion	16 bits
Output analog/digital conversion	16 bits
Response time	Process input, thermocouple, 2 wires resistor: <150ms RTD input, potentiometer: 300ms
Thermal drift	<80ppm
Residual ripple on current output	<20µA
Residual ripple on voltage output	<10mV
Maximum of consumption	<7VA, ULCOS XXXSIL <7.6VA
Operating temperature	-10°C … +60°C
Storage temperature	-25°C … +80°C
Relative humidity	<80% RH (non-condensing)
Protection factor	IP20 Black self-extinguishing polyamide housing V0

SIL Products
(*) An undetected dangerous failure is defined as a condition in which the analog output or the relay state does not correspond to the applied input with an accuracy of 0.1%, except for:

- 0–10 V input voltage caliber: 0.4%
- Output voltage caliber: 7.7%
- Thermocouple input caliber: 31.8%
- 0–100 mV input voltage caliber: 13.9%

and the system is not in a safe state while operating in SIL mode.

Options listing

Option	Device code
Tropicalization (500h protection for 95% humidity excluding display)	ULCOS 9XXXX-T

Functions

Display functions	
LCD display	Graphic display by LCD screen
5 positions joystick	Allows you to configure the parameters displayed on the front panel screen
Programming lock	Locking of the programming on the front panel or by the IXLOG software Unlock by long press on the joystick
Programming	Programming by Joystick on the front panel or by USB via the special cable **ULCOS 100** and the **IXLOG** software (not available on ULCOS SIL products when SIL mode is activated)
Display Adjustment	Automatic shift of the display resolution according to the displayed value
Memory Mini / Maxi	Storage of the maximum and minimum value of the measurement on each input channel
Customizing the display	Resolution, Comma, Contrast adjustment
SIL Mode	Safety mode respecting the SIL2 standard. Setting the various interfaces to safety position in the event of a fault observed
Input	
Inputs display	The display allows to visualize the input in physical value and in programmed value
Adjustable input scale	Allows to zoom on the input either in manual or automatic mode
Offset	Manual adjustment of the input offset
Taring	Taring function at process input (by validation)
Cut-off	Threshold below which the input is considered as null

Smart functions	
Sensor signal loss	Translates the sensor signal loss on: • the display, • each of the analog outputs, • the digital output, • the status of the relays
Filtering	Integration of the measurement over the defined time (in seconds)
Square root	The output(s) are function of the square root of the input
Pilot function/simulation	The pilot function makes it possible to act on the display value influencing the output(s), independently of the input The Pilot function is activated either by the USB link (not available on ULCOS SIL products when SIL mode is activated) or by the joystick on the front panel
Segmentation in 99 points	Linearization in 99 points (free choice for each point), allows to create an output function by segmentation of the signal of each input channel
Segmentation PTC-NTC resistive	Allows to create the PTC or NTC curve by segmentation of the input signal (programmable only by the **IXLOG** software)
CJC	Cold junction compensation by 16 bit digital sensor
Outputs	
Visualization of the outputs	The display allows to visualize the outputs, in physical value and percentage; as well as the status of the relays
Output assignment	Assignment of outputs to inputs or to the control function, independently for each channel
Adjustable output scale	Allows you to zoom in on the outputs
Output limitation	Possibility to limit the value of the outputs - High limit and Low limit
Relay assignment	Assignment of relays to inputs or to the control function, independently for each channel For **ULCOS XXXSIL,** the two relays must be wired in series to ensure the safety function
Thresholds	Single or band mode, with positive or negative safety Adjustment of thresholds, hysteresis and time delay (independent on rise or fall) Direct access to the thresholds
Acknowledgement of alarms	Independently for each alarm
Storage of alarms and/or relay status	Independently for each alarm
Links and communication	
Indirect USB on the front panel	USB on the front panel allowing to connect to the USB socket of a PC via a special **ULCOS 100** cable for programming with the **IXLOG** software (not available on ULCOS SIL products when SIL mode is activated)

Dimensions and wiring

Dimensions

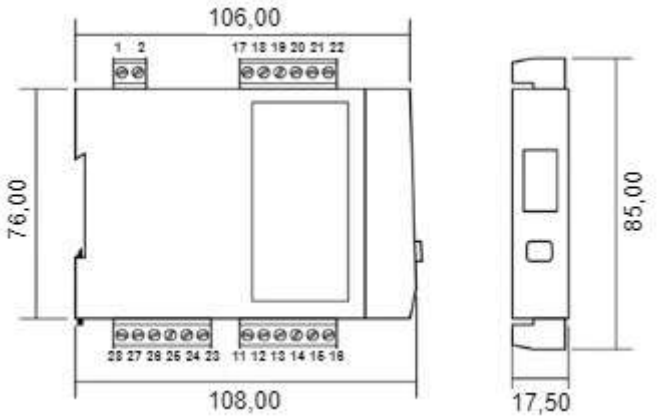

Dimensions: Width: 17.5 mm - Height: 76 mm - Depth: 106 mm

Case connecting on DIN rail

Wiring

ULCOS 900D1 /

ULCOS 900D1SIL

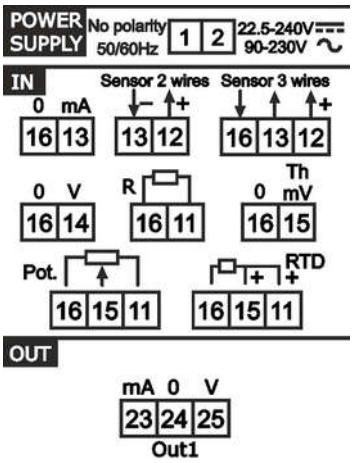

ULCOS 920D0 /

ULCOS 920D0SIL

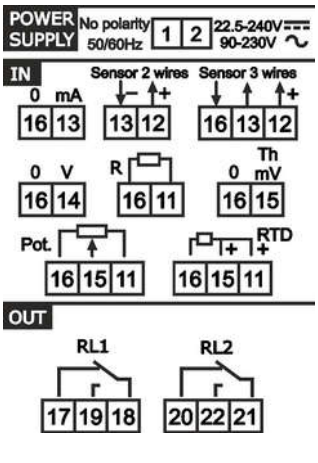

ULCOS 920D2 /

ULCOS 920D2SIL

