Brand of NTN corporation

Technical data

USFE209

Bearing units



Grey cast housing, radial insert ball bearing with socket set screws, single lip seal

KIT CONTENT

US209G2, FE209

VISUAL (S)

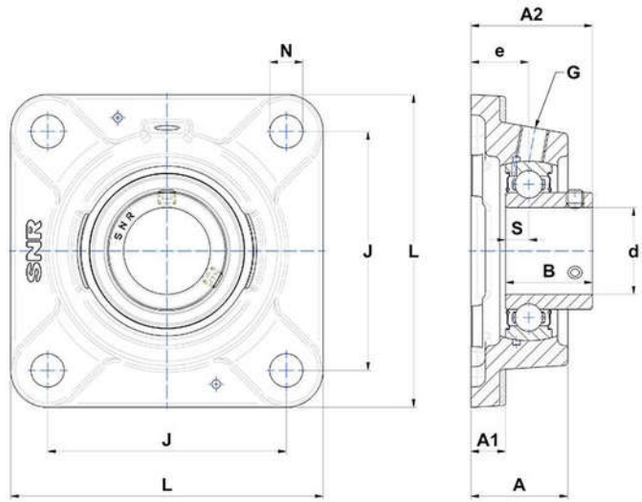

PRODUCT DEFINITION

Brand	SNR
A - Housing height	40 mm
A1 - Housing foot height / flange height	13 mm
A2 - Total height from mounting surface	55 mm
B - Width of Inner Ring	41,2 mm
d - Shaft diameter	45 mm

PRODUCT DEFINITION	
e - Distance mounting surface to bearing center	24 mm
G - Grease fitting	R1/8"
J - Mounting holes distance	105 mm
L - Housing width / diameter	137 mm
N - Mounting hole dimension	14 mm
S - Distance front side/bearing centre	10,2 mm

PRODUCT PERFORMANCE	
C - Dynamic load rating	31850000 mN
C0 - Static load rating	20800000 mN
Operating temperature min.	253,15 °K
Operating temperature max.	373,15 °K

OTHER FEATURES	
Mass	2,19 kg
Recommended tightening torque for set screw	11.5 N-m