X20(c)DI4371

Data sheet
3.30 (08.2024)



Translation of the original documentation

Publishing information

B&R Industrial Automation GmbH

B&R Strasse 1

5142 Eggelsberg

Austria

Telephone: +43 7748 6586-0

Fax: +43 7748 6586-26

office@br-automation.com

Disclaimer

All information in this document is current as of its creation. The contents of this document are subject to change without notice. B&R Industrial Automation GmbH assumes unlimited liability in particular for technical or editorial errors in this document only (i) in the event of gross negligence or (ii) for culpably inflicted personal injury. Beyond that, liability is excluded to the extent permitted by law. Liability in cases in which the law stipulates mandatory unlimited liability (such as product liability) remains unaffected. Liability for indirect damage, consequential damage, business interruption, loss of profit or loss of information and data is excluded, in particular for damage that is directly or indirectly attributable to the delivery, performance and use of this material.

B&R Industrial Automation GmbH notes that the software and hardware designations and brand names of the respective companies used in this document are subject to general trademark, brand or patent protection.

Hardware and software from third-party suppliers referenced in this document is subject exclusively to the respective terms of use of these third-party providers. B&R Industrial Automation GmbH assumes no liability in this regard. Any recommendations made by B&R Industrial Automation GmbH are not contractual content, but merely non-binding information for which no liability is assumed. When using hardware and software from third-party suppliers, the relevant user documentation of these third-party suppliers must additionally be consulted and, in particular, the safety guidelines and technical specifications contained therein must be observed. The compatibility of the products from B&R Industrial Automation GmbH described in this document with hardware and software from third-party suppliers is not contractual content unless this has been separately agreed in individual cases; in this respect, warranty for such compatibility is excluded in any case, and it is the sole responsibility of the customer to verify this compatibility in advance.

Version history

B&R makes every effort to keep documents as current as possible. The most current versions are available for download on the B&R website (www.br-automation.com).

1 General information

1.1 Other applicable documents

For additional and supplementary information, see the following documents.

Other applicable documents

Document name	Title
MAX20	X20 System user's manual
MAEMV	Installations / EMV guide

1.2 Coated modules

Coated modules are X20 modules with a protective coating for the electronics component. This coating protects X20c modules from condensation and corrosive gases.
The modules' electronics are fully compatible with the corresponding X20 modules.

For simplification purposes, only images and module IDs of uncoated modules are used in this data sheet.

The coating has been certified according to the following standards:

- Condensation: BMW GS 95011-4, 2x 1 cycle
- Corrosive gas: EN 60068-2-60, method 4, exposure 21 days



1.2.1 Starting temperature

The starting temperature describes the minimum permissible ambient temperature in a voltage-free state at the time the coated module is switched on. This is permitted to be as low as -40°C. During operation, the conditions as specified in the technical data continue to apply.

Information:

It is important to absolutely ensure that there is no forced cooling by air currents in the closed control cabinet, e.g. due to the use of a fan or ventilation slots.

1.3 Order data

Order number	Short description	Figure
	Digital inputs	
X20DI4371	X20 digital input module, 4 inputs, 24 VDC, sink, configurable input filter, 3-wire connections	
X20cDI4371	X20 digital input module, coated, 4 inputs, 24 VDC, sink, configurable input filter, 3-wire connections	
	Required accessories	
	Bus modules	
X20BM11	X20 bus module, 24 VDC keyed, internal I/O power supply connected through	
X20BM15	X20 bus module, with node number switch, 24 VDC keyed, internal I/O power supply connected through	
X20cBM11	X20 bus module, coated, 24 VDC keyed, internal I/O power supply connected through	
	Terminal blocks	
X20TB12	X20 terminal block, 12-pin, 24 VDC keyed	

Table 1: X20DI4371, X20cDI4371 - Order data

1.4 Module description

The module is equipped with 4 inputs for 3-wire connections.

- 24 VDC and GND for the sensor power supply

Functions:

- Digital inputs
- Event counters

Digital inputs

The digital inputs are equipped with an input filter with a configurable input delay.

Event counters

The module is equipped with event counters that can be used to evaluate falling, rising or both edges.

2 Technical description

2.1 Technical data

Order number	X20DI4371	X20cDI4371
Short description		
I/O module	4 digital inputs 24 VDC for 3-wire connections	
General information		
B&R ID code	0x1B92	0xE21F
Status indicators	I/O function per channel, operating state, module status	
Diagnostics		
Module run/error	Yes, using LED status indicator and software	
Power consumption		
Bus	0.14 W	
Internal I/O	0.59 W	
Additional power dissipation caused by actuators (resistive) [W]	-	
Certifications		
CE	Yes	
UKCA	Yes	
ATEX	Zone 2, II 3G Ex nA nC IIA T5 Gc IP20, Ta (see X20 user's manual) FTZÚ 09 ATEX 0083X	
UL	cULus E115267 Industrial control equipment	
HazLoc	cCSAus 244665 Process control equipment for hazardous locations Class I, Division 2, Groups ABCD, T5	
DNV	Temperature: **B** (0 to 55°C) Humidity: **B** (up to 100%) Vibration: **B** (4 g) EMC: **B** (bridge and open deck)	
CCS	Yes	-
LR	ENV1	
KR	Yes	
ABS	Yes	
BV	**EC33B** Temperature: 5 - 55°C Vibration: 4 g EMC: Bridge and open deck	
KC	Yes	-
Digital inputs		
Nominal voltage	24 VDC	
Input characteristics per EN 61131-2	Type 1	
Input voltage	24 VDC -15% / +20%	
Input current at 24 VDC	Typ. 3.75 mA	
Input circuit	Sink	
Input filter		
Hardware	≤100 µs	
Software	Default 1 ms, configurable between 0 and 25 ms in 0.2 ms increments	
Connection type	3-wire connections	
Input resistance	Typ. 6.4 kΩ	
Switching threshold		
Low	<5 VDC	
High	>15 VDC	
Insulation voltage between channel and bus	500 V_{eff}	
Event counters		
Quantity	4	
Signal form	Square wave pulse	
Evaluation	Configurable edge event, cyclical counter	
Input frequency	Max. 1 kHz	
Counter 1	Input 1	
Counter 2	Input 2	
Counter 3	Input 3	
Counter 4	Input 4	
Counter frequency	Max. 1 kHz (if input filter switched off)	Max. 1 kHz (if input filters switched off)
Counter size	16-bit	

Table 2: X20DI4371, X20cDI4371 - Technical data

Order number	X20DI4371	X20cDI4371
Sensor power supply		
Power consumption	Max. 12 W [1]	
Voltage	Module power supply minus voltage drop for short-circuit protection	
Voltage drop for short-circuit protection at 500 mA	Max. 2 VDC	
Summation current	0.5 A	
Short-circuit proof	Yes	
Electrical properties		
Electrical isolation	Channel isolated from bus Channel not isolated from channel	
Operating conditions		
Mounting orientation		
Horizontal	Yes	
Vertical	Yes	
Installation elevation above sea level		
0 to 2000 m	No limitation	
>2000 m	Reduction of ambient temperature by 0.5°C per 100 m	
Degree of protection per EN 60529	IP20	
Ambient conditions		
Temperature		
Operation		
Horizontal mounting orientation	-25 to 60°C	
Vertical mounting orientation	-25 to 50°C	
Derating	-	
Starting temperature	-	Yes, -40°C
Storage	-40 to 85°C	
Transport	-40 to 85°C	
Relative humidity		
Operation	5 to 95%, non-condensing	Up to 100%, condensing
Storage	5 to 95%, non-condensing	
Transport	5 to 95%, non-condensing	
Mechanical properties		
Note	Order 1x terminal block X20TB12 separately. Order 1x bus module X20BM11 separately.	Order 1x terminal block X20TB12 separately. Order 1x bus module X20cBM11 separately.
Pitch	12.5$^{+0.2}$ mm	

Table 2: X20DI4371, X20cDI4371 - Technical data

1) The power consumption of the sensors connected to the module is not permitted to exceed 12 W.

2.2 Status LEDs

For a description of the various operating modes, see section "Additional information - Diagnostic LEDs" in the X20 System user's manual.

Image	LED	Color	Status	Description
	r	Green	Off	No power to module
			Single flash	RESET mode
			Blinking	PREOPERATIONAL mode
			On	RUN mode
	e	Red	Off	Module supply not connected or everything OK
	e + r	Red on / Green single flash		Invalid firmware
	1 - 4	Green		Input status of the corresponding digital input

2.3 Pinout

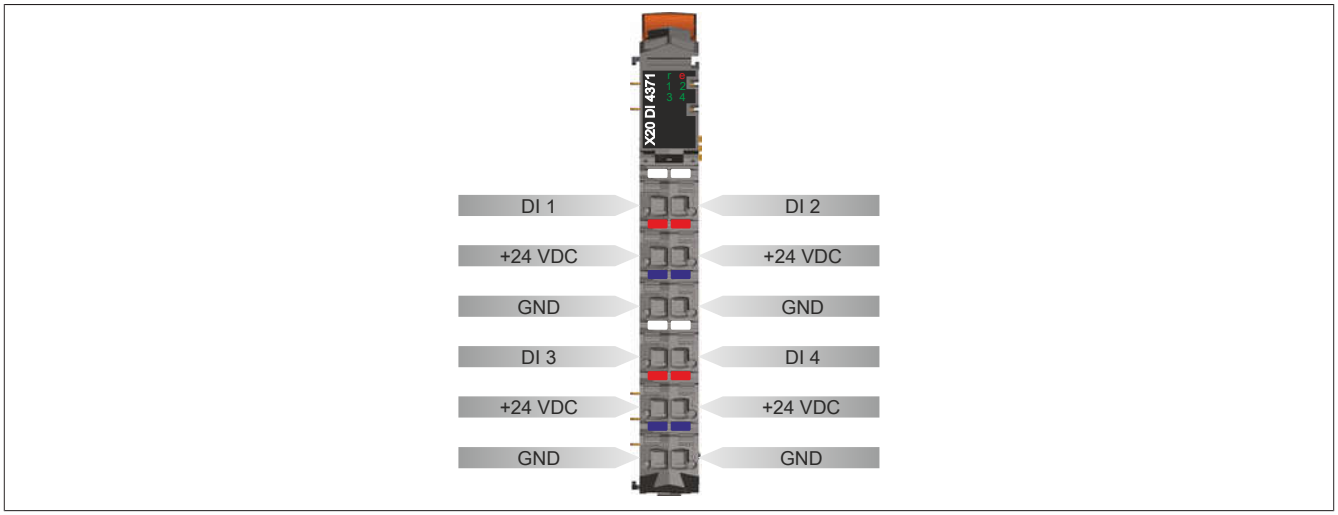

2.4 Connection example

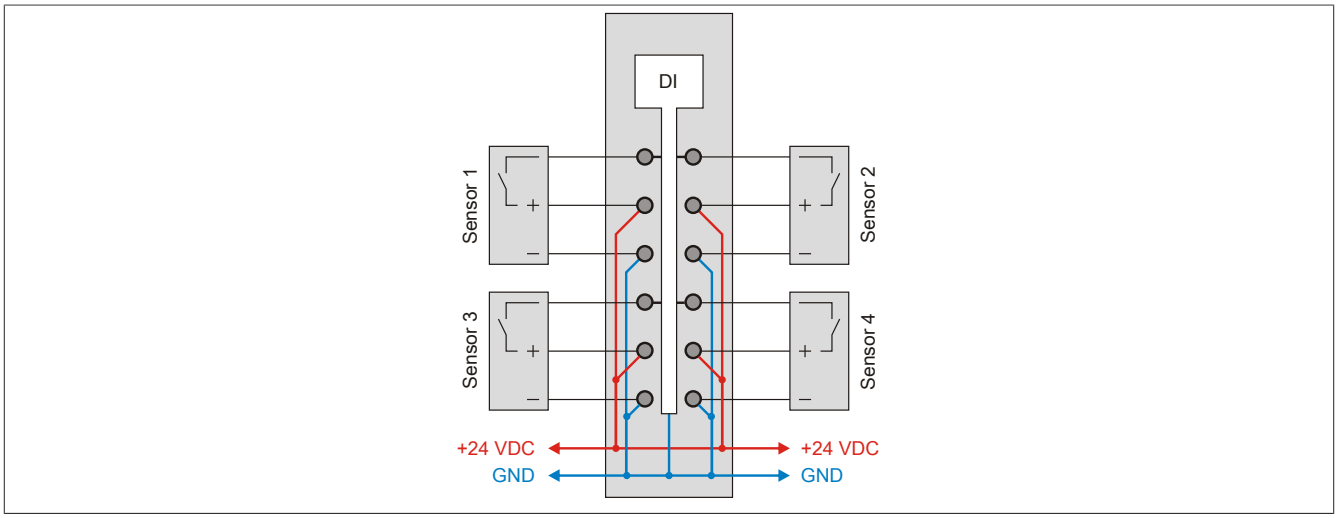

2.5 Input circuit diagram

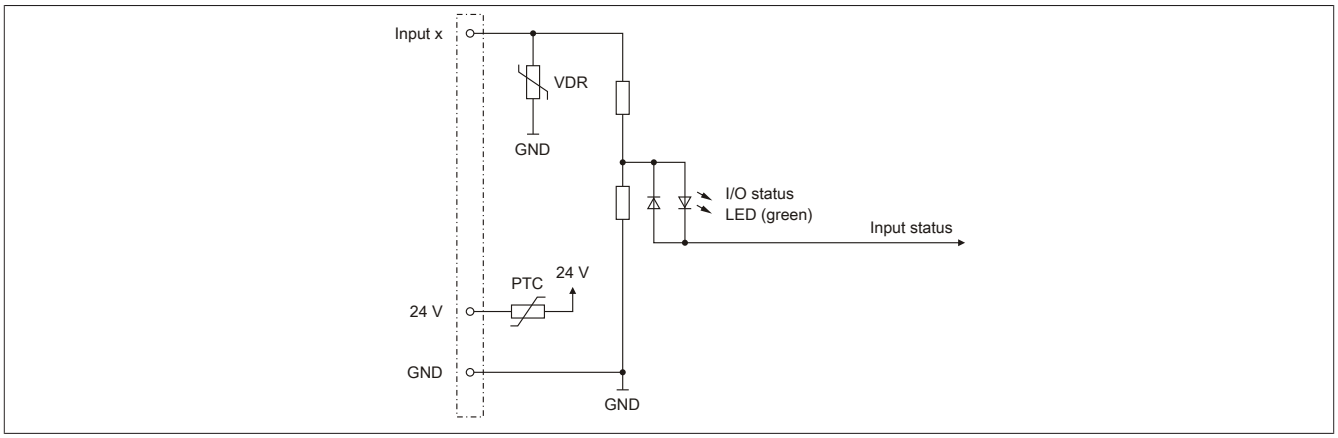

3 Function description

3.1 Digital inputs

The module is equipped with 4 digital input channels.

3.1.1 Recording the input state

Unfiltered

The input state is collected with a fixed offset to the network cycle and transferred in the same cycle.

Filtered

The filtered state is collected with a fixed offset to the network cycle and transferred in the same cycle. Filtering takes place asynchronously to the network in multiples of 200 µs with a network-related jitter of up to 50 µs.

Packed outputs (only function model 0 - Standard)

Setting "Packed inputs" in the Automation Studio I/O configuration can be used to determine whether all bits of the register should be applied as individual data points in the Automation Studio I/O mapping ("DigitalInput01 to DigitalInputxx") or whether the register should be displayed as a single USINT data point ("DigitalInput").

Information:

The register is described in "Input status of digital inputs 1 to 4" on page 12.

3.1.2 Input filter

An input filter is available for each input. Disturbance pulses that are shorter than the input delay are suppressed by the input filter.

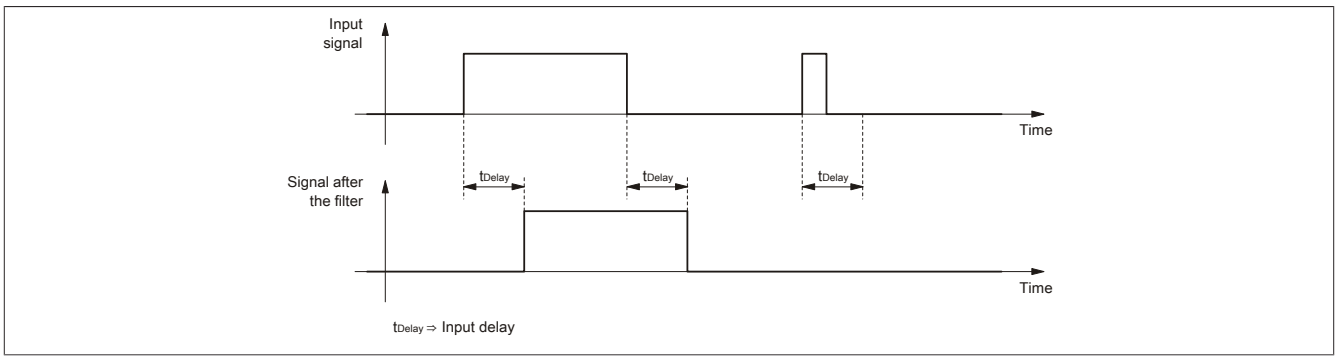

The input delay can be set in steps of 100 µs. It makes sense, however, to enter values in steps of 2 since the input signals are sampled in an interval of 200 µs.

Values	Filter
0	No software filter
2	0.2 ms
...	...
250	25 ms - Higher values are limited to this value.

Information:

The register is described in "Digital input filter" on page 12.

3.2 Event counters

The module is equipped with 4 counting channels that can be used as event counters.

Event counter operation

Each counter can be configured individually for falling, rising or both edges.



Information:

The registers are described in "The event counter function model" on page 12.

4 Commissioning

4.1 Using the module on the bus controller

Function model 254 "Bus controller" is used by default only by non-configurable bus controllers. All other bus controllers can use other registers and functions depending on the fieldbus used.

For detailed information, see section "Additional information - Using I/O modules on the bus controller" in the X20 user's manual (version 3.50 or later).

4.1.1 CAN I/O bus controller

The module occupies 1 digital logical slot on CAN I/O.

5 Register description

5.1 General data points

In addition to the registers described in the register description, the module has additional general data points. These are not module-specific but contain general information such as serial number and hardware variant.

General data points are described in section "Additional information - General data points" in the X20 System user's manual.

5.2 Function model 0 - Standard

Register	Fixed offset	Name	Data type	Read		Write	
				Cyclic	Acyclic	Cyclic	Acyclic
Configuration							
18	-	ConfigOutput01 (input filter)	USINT				•
Communication							
0	1	DigitalInput	USINT	•			
		DigitalInput01	Bit 0				
		...	...				
		DigitalInput04	Bit 3				

Fixed modules require their data points to be in a specific order in the X2X frame. Cyclic access occurs according to a predefined offset, not based on the register address.

Acyclic access continues to be based on the register numbers.

5.3 Function model 1 - Event counter

Register	Fixed offset	Name	Data type	Read		Write	
				Cyclic	Acyclic	Cyclic	Acyclic
Configuration							
14	-	ConfigOutput02 (edge configuration)	USINT				•
18	-	ConfigOutput01 (input filter)	USINT				•
Communication							
0	1	Input status of digital inputs 1 to 4	USINT	•			
		DigitalInput01	Bit 0				
		...	...				
		DigitalInput04	Bit 3				
4	2	Counter01	UINT	•			
6	4	Counter02	UINT	•			
8	6	Counter03	UINT	•			
10	8	Counter04	UINT	•			
12	0	Resets the counter registers	USINT			•	
		ResetCounter01	Bit 0				
		...	...				
		ResetCounter04	Bit 3				

Fixed modules require their data points to be in a specific order in the X2X frame. Cyclic access occurs according to a predefined offset, not based on the register address.

Acyclic access continues to be based on the register numbers.

5.4 Function model 254 - Bus Controller

Register	Offset[1)]	Name	Data type	Read		Write	
				Cyclic	Acyclic	Cyclic	Acyclic
Configuration							
18	-	ConfigOutput01 (input filter)	USINT				•
Communication							
0	0	Input status of digital inputs 1 to 4	USINT	•			
		DigitalInput01	Bit 0				
		...	...				
		DigitalInput04	Bit 3				

1) The offset specifies where the register is within the CAN object.

5.5 Digital inputs

5.5.1 Digital input filter

Name:
ConfigOutput01

The filter value for all digital inputs can be configured in this register.

Data type	Values	Filter
USINT	0	No software filter (bus controller default setting)
	2	0.2 ms
	...	...
	250	25 ms - Higher values are limited to this value.

5.5.2 Input status of digital inputs 1 to 4

Name:
DigitalInput or
DigitalInput01 to DigitalInput04

The input status of digital inputs 1 to 4 is mapped in this register.

Data type	Value	Information[1)]
USINT	0 to 15	Packed inputs = On Data point: "DigitalInput"
	See the bit structure.	Packed inputs = Off or function model ≠ 0 - Standard Data points: "DigitalInput01" to "DigitalInput04"

1) See "Digital inputs - Record input status" on page 8.

Bit structure:

Bit	Name	Value	Information
0	DigitalInput01	0 or 1	Input status - Digital input 1
...		...	
3	DigitalInput04	0 or 1	Input state - Digital input 4

5.6 The event counter function model

Starting with hardware variant F0 and firmware version 801, the module is equipped with 4 software-side counters for signal edges. Each counter register can be configured individually for falling, rising or both edges.

5.6.1 Counter register

Name:
Counter01 to Counter04

These registers provide the current counter value for the configured events.

Data type	Value
UINT	0 to 65535

5.6.2 Resets the counter registers

Name:
ResetCounter01 to ResetCounter04

Using these data points, the corresponding counter registers can be reset to 0.

Data type	Values
USINT	See the bit structure.

Bit structure:

Bit	Name	Value	Information
0	ResetCounter01	0	No change
		1	Counter register 1 is reset
...		...	
3	ResetCounter04	0	No change
		1	Counter register 4 is reset



Information:

A counter is only reset if a positive edge is detected on the reset bit.

A continually set reset bit does not prevent counting in the counter register.

5.6.3 Configuration of the edges

Name:
ConfigOutput02

This register is used to configure which event will be assessed on the channel input for the respective counter.

Data type	Values
USINT	See the bit structure.

Bit structure:

Bit	Name	Value	Information
0	Rising edge on input 1	0	Event is not counted
		1	Event increments Counter01
...		...	
3	Rising edge on input 4	0	Event is not counted
		1	Event increments Counter04
4	Falling edge on input 1	0	Event is not counted
		1	Event increments Counter01
...		...	
7	Falling edge on input 4	0	Event is not counted
		1	Event increments Counter04

5.7 Minimum cycle time

The minimum cycle time specifies how far the bus cycle can be reduced without communication errors occurring. It is important to note that very fast cycles reduce the idle time available for handling monitoring, diagnostics and acyclic commands.

	Minimum cycle time
Without filtering	100 µs
With filtering	150 µs

5.8 Minimum I/O update time

The minimum I/O update time specifies how far the bus cycle can be reduced so that an I/O update is performed in each cycle.

	Minimum I/O update time
Without filtering	100 µs
With filtering	200 µs