Ball eye rod end AP6, series CM2

3660902000

AVENTICS Ball eye rod ends



Technical data

Industry	Industrial
To mount on series	PRA TRB CVI 167 CCI KPZ SSI MNI RPC RDC
Type	narrow version
Thread size	M10x1,25
Swivel bearing Ø	10 mm
Weight	0.08 kg

Material

Housing material	Steel, chrome-plated
Surface housing	galvanized
Part No.	3660902000

Dimensions

Ball eye rod end AP6, series CM2

3660902000

2024-04-29

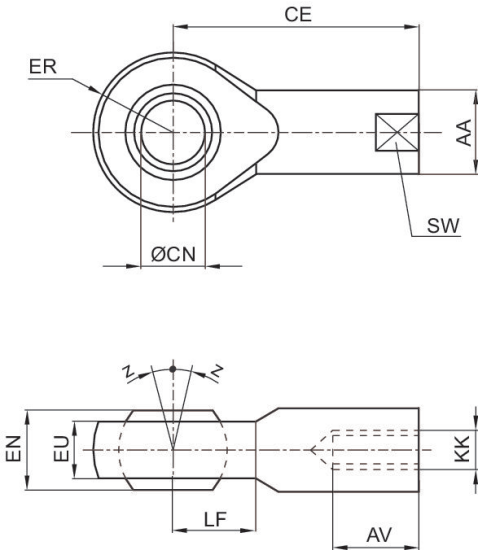

Part No.	KK	AA	AV min.	CE	Ø CN H7	EN –0,1	ER	EU max.	LF
3660902000	M10x1.25	19	15	43	10	12	15	9	14
3660904000	M12x1.25	22	16	50	12	12	17	8	16

Part No.	SW	Z [°] max.
3660902000	17	8
3660904000	19	8