Mini cylinder, Series ICM

1326125020

- Ø 8 ... 32 mm
- Max. stroke: 400 mm
- corrosion-resistant
- Suitable for us in food processing

AVENTICS Series ICM Mini cylinders

The AVENTICS Series ICM is a mini cylinder and cost-efficient solution for high corrosion resistance and reliability – even in harsh environments. The cylinder tube and piston rod are made of stainless steel, the cylinder covers are fashioned from a high-quality polymer.



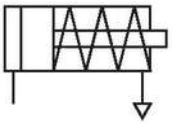

Technical data

Industry	Industrial
Piston Ø	25 mm
Stroke	25 mm
Ports	G 1/8
Functional principle	Single-acting, retracted without pressure
Cushioning	Elastic cushioning
Magnetic piston	Piston without magnet
Environmental requirements	Industry standard suitable for use in food processing
Piston rod thread - type	External thread
Piston rod thread	M10x1,25
Piston rod	single
Scraper	Standard Industry Scraper
Pressure for determining piston forces	6,3 bar
Extracting piston force	250 N
Min. ambient temperature	-20 °C
Max. ambient temperature	70 °C
Min. working pressure	3 bar
Max. working pressure	10 bar
Min. spring force	28 N

Max. spring force	62 N
Weight	0.18 kg
Stroke max.	25 mm
Medium	Compressed air
Min. medium temperature	-20 °C
Max. medium temperature	70 °C
Max. particle size	50 µm
Min. oil content of compressed air	0 mg/m³

Material

Piston rod	Stainless Steel
Scraper material	Polyurethane
Seal material	Acrylonitrile butadiene rubber
Material, front cover	Polyoxymethylene
Cylinder tube	Stainless Steel
End cover	Polyoxymethylene
Connection thread	Stainless Steel
Nut for cylinder mounting	Polyamide
Nut for piston rod	Stainless Steel
Part No.	1326125020

Technical information

Nut MR3 included in supply

The pressure dew point must be at least 15 °C less than ambient and medium temperature and may not exceed 3 °C.

The oil content of compressed air must remain constant during the life cycle.

Use only the approved oils from AVENTICS. Further information can be found in the “Technical information” document (available in https://www.emerson.com/en-us/support).

Dimensions

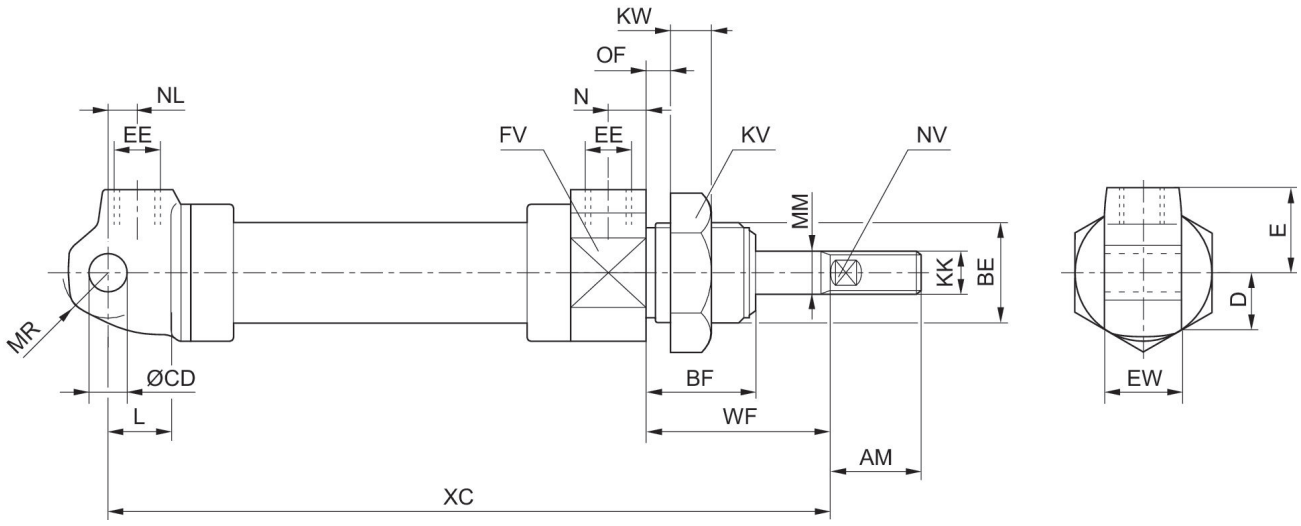

Overview drawing

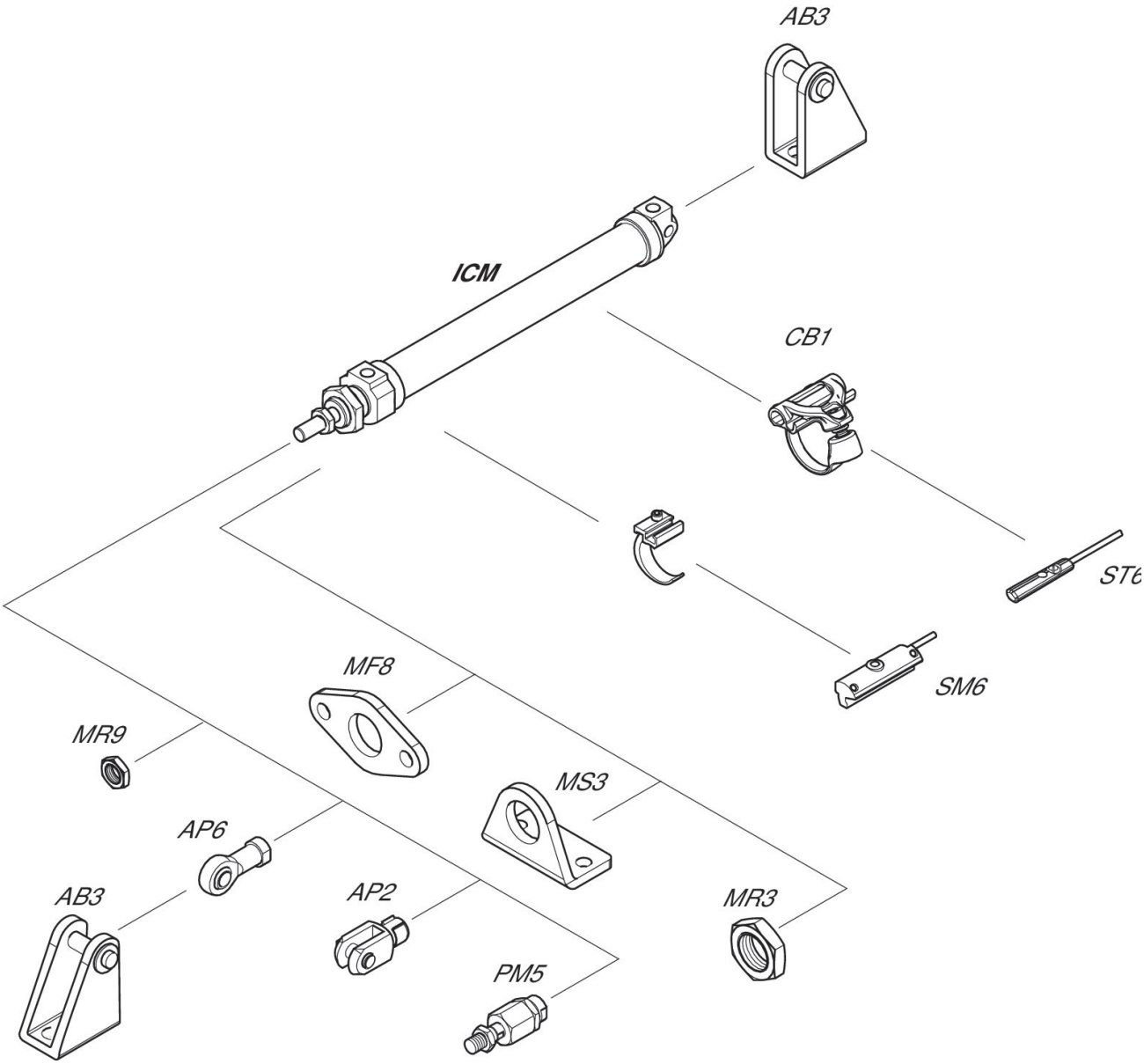

NOTE: This overview drawing is only for orientation to indicate where the various accessory parts can be fastened to the cylinder. The illustration has been simplified for this purpose. It is thus not possible to derive the dimensions from this overview.

Piston Ø	AM +0 -2	BE	BF	CD H11	D	E	EE	EW d13	FV
8	12	M12x1,25	14	4	7.5	12	M5	8	14
10	12	M12x1,25	14	4	8	12	M5	8	16
12	16	M16x1,5	20	6	10	13.5	M5	12	20
16	16	M16x1,5	20	6	12	14	M5	12	24
20	20	M22x1,5	22	8	15	18	G 1/8	16	30
25	27	M22x1,5	22	8	17	18	G 1/8	16	34

Piston Ø	KK	KV	KW	L	MM	MR	N	NL	NV
8	M4	17	7	7	4	5	5	12	3
10	M4	17	7	7	4	5	5	12	3
12	M6	24	7	9	6	7.5	5	7	4
16	M6	24	7	9	6	7.5	5	6	4
20	M8	30	8	12	8	10	8	7	6
25	M10x1,25	30	8	12	10	10	8	6.5	8

Piston Ø	OF max.	WF ±1,2	XC ±1
8	4.5	16	114
10	4.5	16	114
12	10	22	112
16	10	22	108
20	10	24	123
25	10	23	127