This is how you can assemble your signal tower

ClassicLOOK

DesignLOOK

▸ STEP 1
Select the required optical or audible elements.

Order numbers can be found on page 5-6.



Audible Signal Element
- 8 tone siren
- 2 tone siren

Optical Signal Elements
- Twin*LIGHT*
- Twin*FLASH*
- LED Permanent light element multicolour



▸ STEP 2
Select the terminal element and appropriate mounting solution for your application.

Tube Mounting	Single Hole Mounting	Base Mounting	Tube Mounting	Single Hole Mounting	Base Mounting
					
Terminal element Order no. **630 800 75**	Terminal element Order no. **630 800 75**	Terminal element Order no. **630 800 75**	Terminal element Order no. **630 700 75**	Terminal element Order no. **630 700 75**	Terminal element Order no. **630 700 75**
+	+	+	+	+	+
					
Adapter for tube mounting Order no. **630 830 00**	Adapter for single hole mounting Order no. **630 820 00**	Adapter for base mounting Order no. **630 810 00**	Adapter for tube mounting Order no. **630 730 00**	Adapter for single hole mounting Order no. **630 720 00**	Adapter for base mounting Order no. **630 710 00**

▸ STEP 3
Optional:
Where appropriate, select the bracket.

Can be installed between the terminal element and the mounting adapter.

Extension tube Order no. **960 630 03**	Extension tube Order no. **960 630 03**	Extension tube Order no. **960 630 03**	Extension tube Order no. **960 630 07**	Extension tube Order no. **960 630 07**	Extension tube Order no. **960 630 07**
					

▸ STEP 4
Select tube extensions as required.

					
	Bracket for assembly on aluminium profiles Order no. **960 630 02**	Bracket for concealed cable entry Order no. **960 630 01**		Bracket for assembly on aluminium profiles Order no. **960 630 06**	Bracket for concealed cable entry Order no. **960 630 05**

▸ STEP 5
Where appropriate, select the bracket and the contact box.

Further accessories can be found in our main catalogue or at **www.werma.com**.

WERMA SIGNALTECHNIK

630/634/635 Kombi*SIGN* 40 - Optical Signal Elements



Kombi*SIGN* 40 Signal Tower
in Classic*LOOK*



Kombi*SIGN* 40 Signal Tower
in Design*LOOK*

- No more blind spots with the Omniview lens
- Design*LOOK* and Classic*LOOK* provide the appropriate signal tower for your application
- Twin*LIGHT* and Twin*FLASH* combine two light effects in one element

TECHNICAL SPECIFICATIONS:

Dimensions (Ø x Height):	40 mm x 58,6 mm
Lens:	PC, transparent
Twin*LIGHT*	
Light effects:	LED Permanent or Blinking light, can be set via DIP-Switch
Voltage:	24 V AC/DC
Current consumption:	50 mA
Twin*FLASH*	
Light effects:	LED Flash light or EVS, can be set via DIP-Switch
Voltage:	24 V DC
Current consumption:	65 mA
Multicolour	
Light effect:	LED Permanent light
Colours:	Red, yellow, green, blue, white, violet, turquoise
Voltage:	24 V DC
Current consumption:	100 mA

ORDER SPECIFICATIONS:

	Classic*LOOK*	Design*LOOK*
TwinLIGHT		
red	**634 110 75**	**634 130 75**
green	**634 210 75**	**634 230 75**
yellow	**634 310 75**	**634 330 75**
white	**634 430 75**	**634 430 75**
blue	**634 510 75**	**634 530 75**
Pre-assembled signal tower		
green/yellow/red	**639 300 01**	**639 301 01**
TwinFLASH		
red	**634 120 55**	**634 140 55**
green	**634 220 55**	**634 240 55**
yellow	**634 320 55**	**634 340 55**
white	**634 440 55**	**634 440 55**
blue	**634 520 55**	**634 540 55**
Multicolour		
clear	**634 450 55**	**634 450 55**

Available: 1st Quarter 2016

TECHNICAL DIAGRAMS: see page 20

630/634/635 Kombi*SIGN* 40 - Audible Signal Elements

- 2 tone 85dB siren element
- Continuous or pulse tone adjustable via DIP switch
- High output 8 tone siren with 89 - 95dB adjustable via DIP switch
- 8 tones selectable



8 tone Kombi*SIGN* 40 siren in Design*LOOK*

TECHNICAL SPECIFICATIONS:

Housing:	PC
2 Tone Siren	
Dimensions (Ø x Height):	40 mm x 45 mm
Sound output:	85 dB
Tone type:	Continuous or pulse tone, can be set via DIP-Switch
Voltage:	24 V AC/DC
Current consumption:	80 mA
8 Tone Siren	
Dimensions (Ø x Height):	40 mm x 68 mm
Sound output:	89-95 dB, can be set via DIP-Switch
Tone type:	8 tones, can be set via DIP-Switch
Voltage:	24 V AC/DC
Current consumption:	200 mA



2 tone Kombi*SIGN* 40 siren in Classic*LOOK*

ORDER SPECIFICATIONS:

	Classic*LOOK*	Design*LOOK*
2 Tone Siren	635 800 75	635 700 75
8 Tone Siren	635 810 75	635 710 75

Available: 1st Quarter 2016

TECHNICAL DIAGRAMS

see page 20 + 21



WERMA SIGNALTECHNIK

- The right solution for every installation



KombiSIGN 40 DesignLOOK assembly adapter for single hole mounting



KombiSIGN 40 ClassicLOOK assembly adapter for base mounting



KombiSIGN 40 DesignLOOK assembly adapter for tube mounting

TECHNICAL SPECIFICATIONS:

Terminal element	
Dimensions (Ø x Höhe):	40 mm x 40 mm
Housing:	PC
Fixing:	Base mounting, Single hole mounting, Tube mounting
Seal:	Pre-mounted with each module
Number of modules possible:	Max. 5
Voltage:	24 V AC/DC
Adapter for base mounting	
Dimensions (Ø x Height):	40 mm x 30 mm
Material:	PC
Adapter single hole mounting	
Dimensions (Ø x Height):	40 mm x 54 mm
Material:	PC
Adapter tube mounting	
Dimensions (Ø x Height):	40 mm x 75 mm
Material:	PC

ORDER SPECIFICATIONS:

	ClassicLOOK	DesignLOOK
Terminal element	**630 800 75**	**630 700 75**
Adapter for base mounting	**630 810 00**	**630 710 00**
Adapter for single hole mounting	**630 820 00**	**630 720 00**
Adapter for tube mounting	**630 830 00**	**630 730 00**

Available: 1st Quarter 2016

ACCESSORIES:

	ClassicLOOK	DesignLOOK
Bracket for assembly on aluminium profiles	**960 630 02**	**960 630 06**
Bracket for concealed cable entry	**960 630 01**	**960 630 05**

TECHNICAL DIAGRAMS

see page 19 + 20 + 23

IP66 +60°C -30°C

Technical Diagrams

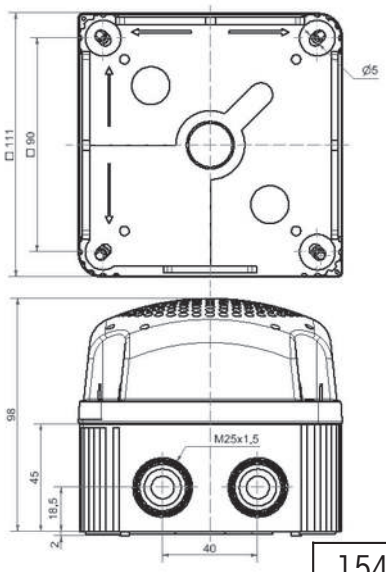

154.000.55

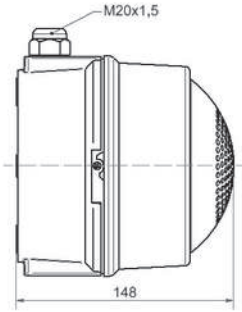

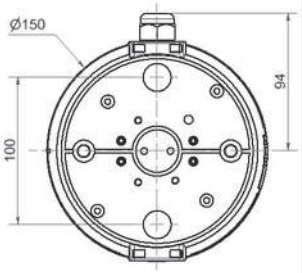

190.020.55

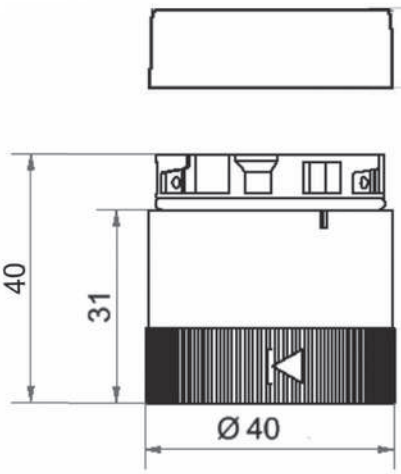

630.X00.75

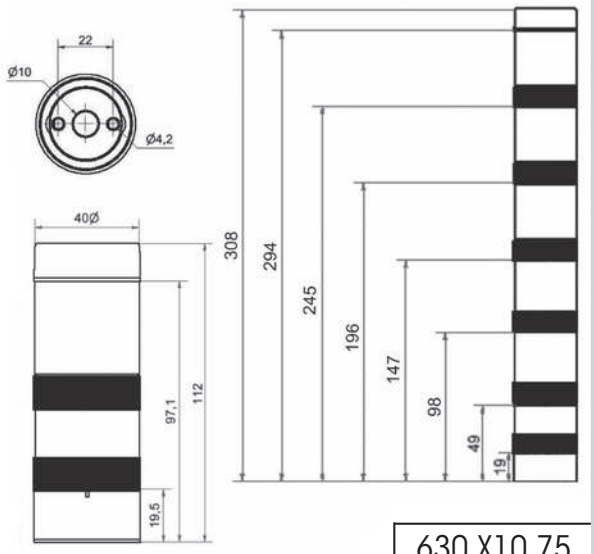

630.X10.75

ADDITIONAL INFORMATION:

You are welcome to request the technical diagrams in digital form. The relevant 3D models, instruction leaflets and connection diagrams can be obtained from us or downloaded from our homepage at any time.

Technical Diagrams

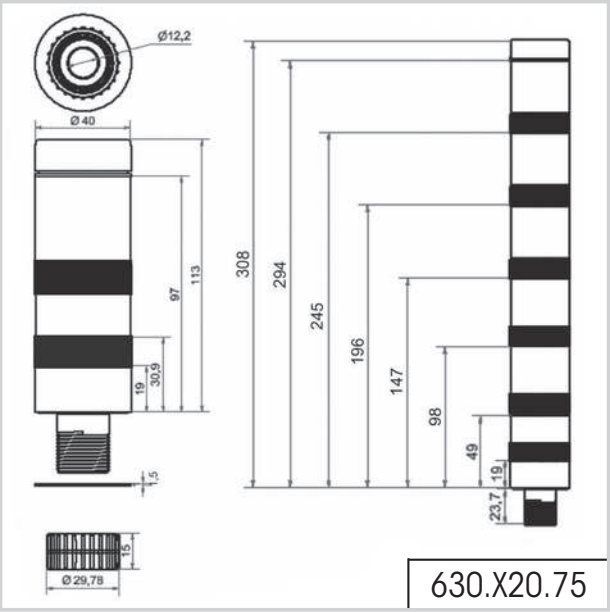

630.X20.75

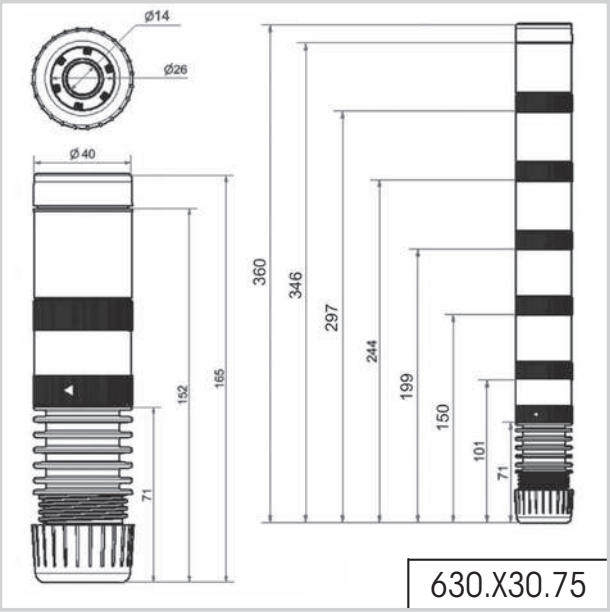

630.X30.75

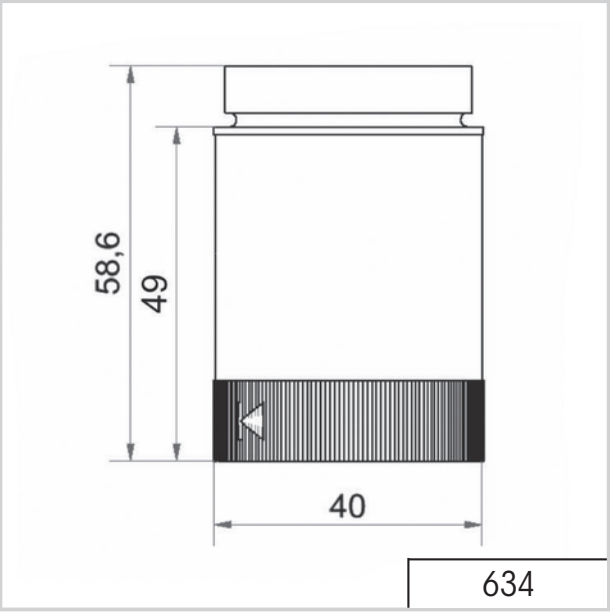

634

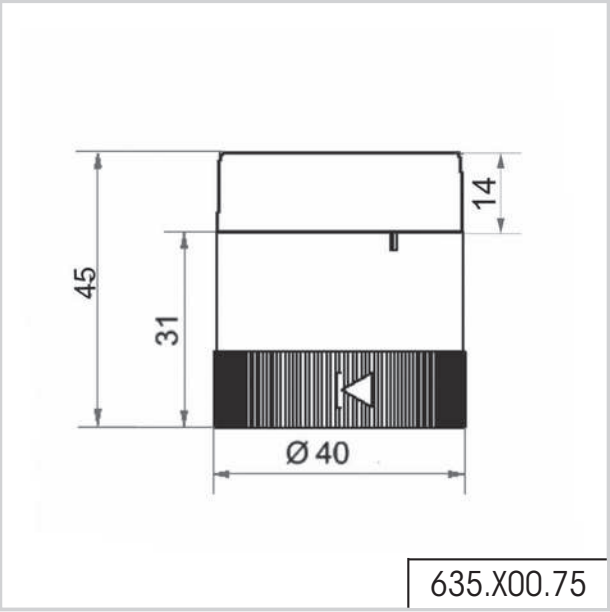

635.X00.75

ADDITIONAL INFORMATION:

You are welcome to request the technical diagrams in digital form. The relevant 3D models, instruction leaflets and connection diagrams can be obtained from us or downloaded from our homepage at any time.

Technical Diagrams

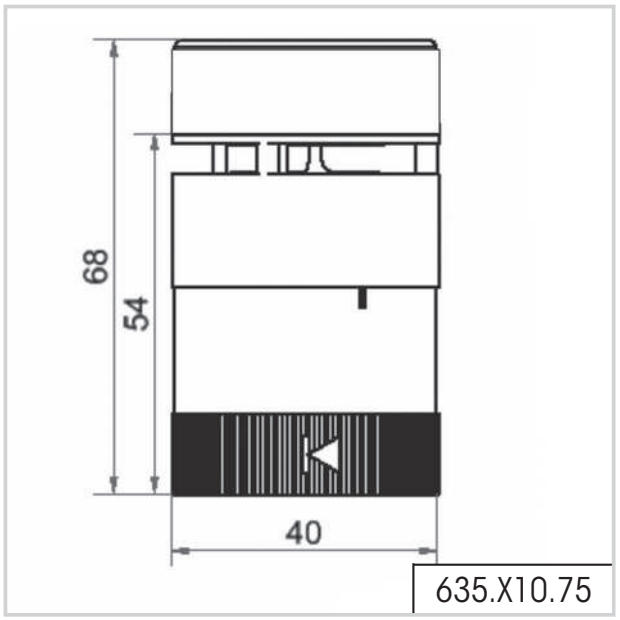

635.X10.75

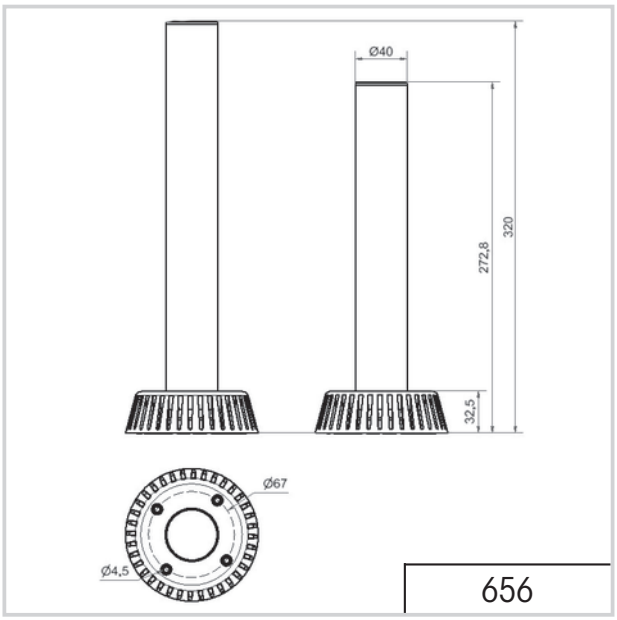

656

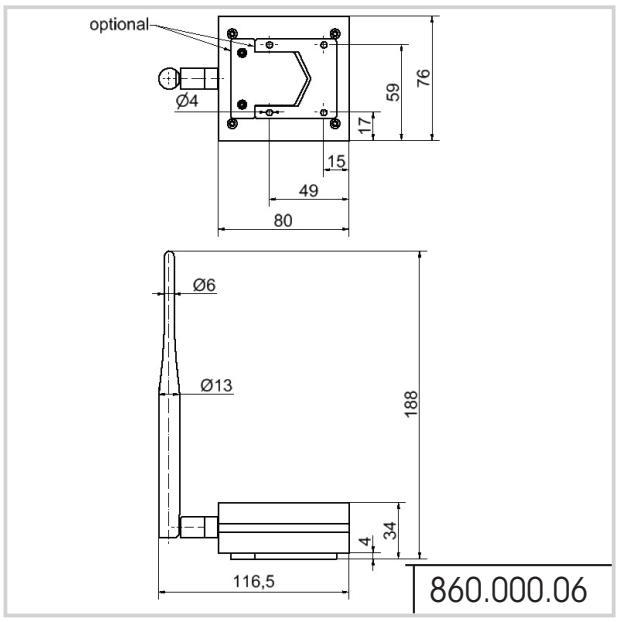

860.000.06

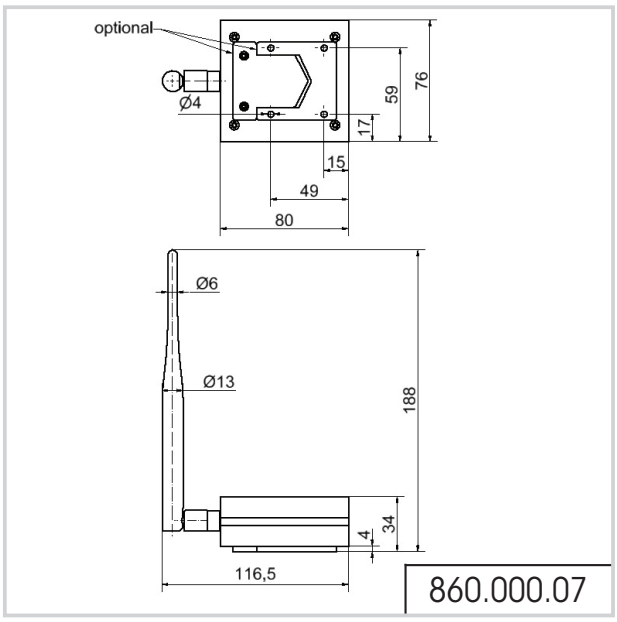

860.000.07

ADDITIONAL INFORMATION:

You are welcome to request the technical diagrams in digital form. The relevant 3D models, instruction leaflets and connection diagrams can be obtained from us or downloaded from our homepage at any time.

Technical Diagrams

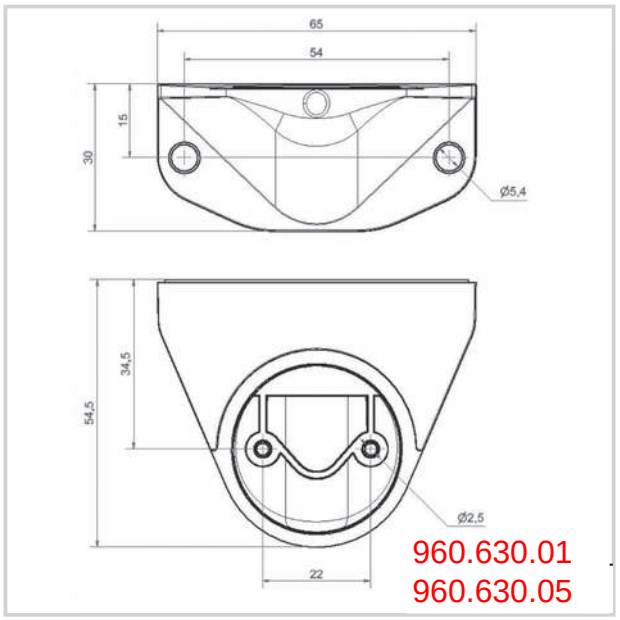

960.630.01
960.630.05

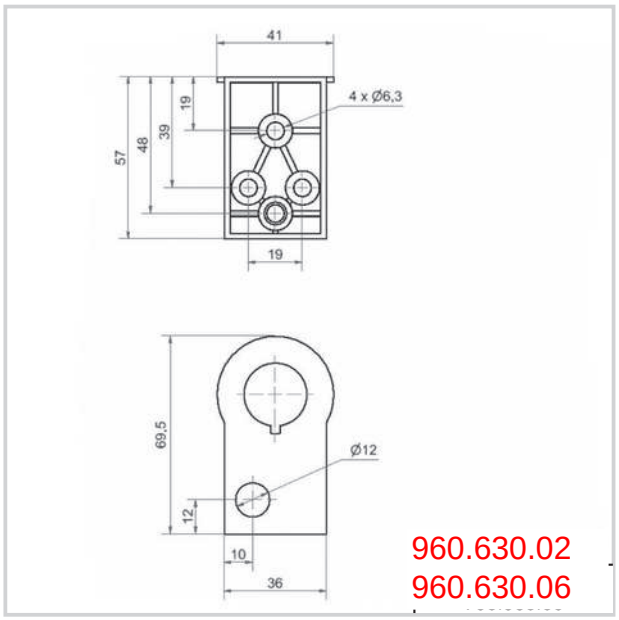

960.630.02
960.630.06

ADDITIONAL INFORMATION:

You are welcome to request the technical diagrams in digital form. The relevant 3D models, instruction leaflets and connection diagrams can be obtained from us or downloaded from our homepage at any time.

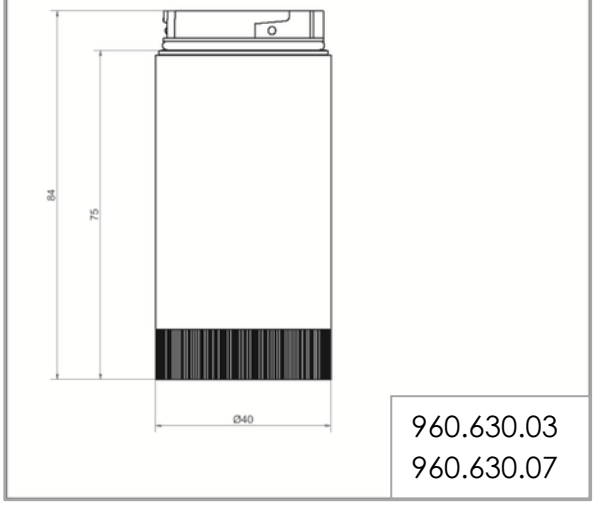

960.630.03
960.630.07

WERMA SIGNALTECHNIK **630,634,635**

EN 60947-5-1

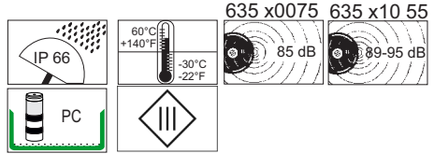

KombiSIGN 40

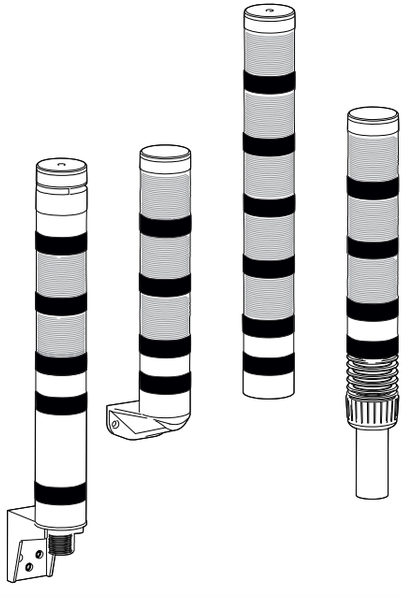

310.630.001.1015© (D)

WERMA SIGNALTECHNIK
WERMA Signaltechnik GmbH + Co. KG
D-78604 Rietheim-Weilheim
Telefon +49 (0)7424 / 9557-0
Telefax +49 (0)7424 / 9557-44
info@werma.com
www.werma.com

DANGER



(D) Anschluss **ausschließlich** durch ausgebildete Elektro-Fachkräfte.
(GB) Electrical connection is to be made by trained electrical specialists **only**.
(F) Le branchement doit **uniquement** être effectué par des professionnels.
(I) Il collegamento deve essere eseguito **solo** da elettricisti specializzati.
(E) La conexión **sólo** debe ser realizada por electricistas debidamente formados.
(PT) A ligação deve ser feita **exclusivamente** por profissional elétrico especializado.
(NL) De aansluiting mag **enkel** gebeuren door erkende vakmensen.
(CZ) Připojení smí **provádět** pouze kvalifikovaný personál.
(PL) Podłączenie **wyłącznie** przez specjalistów-elektryków.
(FI) Liittäminen kuuluu **ainoastaan** koulutettujen sähköalan ammattilaisten tehtäviin.
(RUS) Подключение проводится только специалистом-электриком.
(TR) Bağlantı **sadece** eğitimli elektrik teknisyenleri tarafından yapılmalıdır.
(CN) 布线需由专业电工执行

DANGER
EVS 634 x40 75

(D) Bei Epilepsie ungeeignet!
(GB) Unsuitable for epilepsy sufferers.
(F) Ne convient pas aux personnes souffrant d'épilepsie.
(I) Inadatto per epilettici.
(E) Inadecuado para epilépticos.
(PT) Não aconselhavel a pessoas que sofram de Epilepsia.
(NL) Niet geschikt voor epileptici.
(CZ) Nevhodné pro epileptiky.
(PL) Nie stosować przy zchorzeniu padaczki.
(FI) Ei sovellu epileptikoille.
(RUS) Не подходит для страдающих эпилепсией.
(TR) Epilepsi hastaliği olanlarin kullanmamasi önerilir.
(CN) 不适用于癫痫病患者

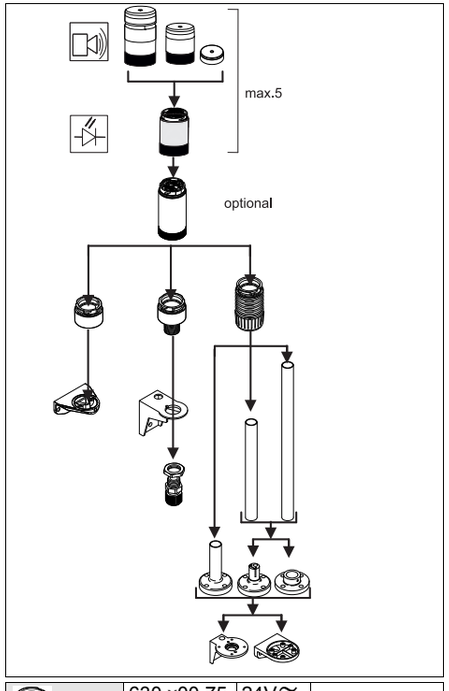

	630 x00 75	24V≃	
TwinLIGHT	634 x10 75 634 x30 75	24V≃ 24V≃	I_{max} 50 mA I_{max} 50 mA
TwinFLASH	634 x20 55 634 x40 55	24V = 24V =	I_{max} 65 mA I_{max} 65 mA
Multicolour	634 450 55	24 V=	I_{max} 100 mA
Sounder	635 x00 75 635 x10 75	24V≃ 24V≃	I_{max} 80 mA I_{max} 200 mA

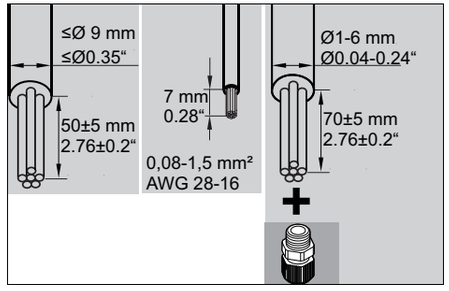



1 960 630 01, 960 630 05 +630 x10 75

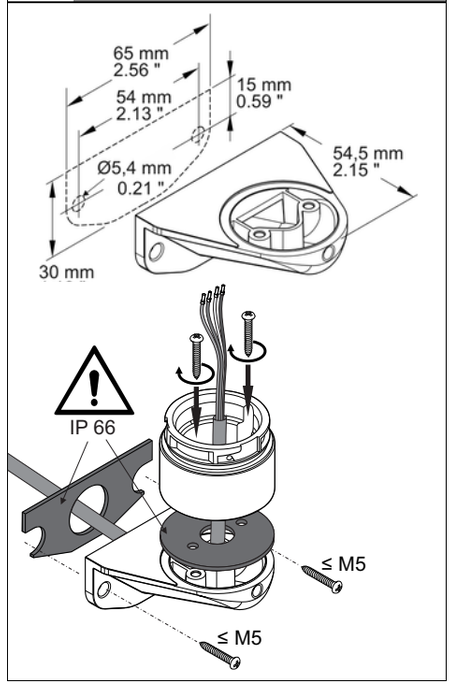

2 630 710 00 630 810 00

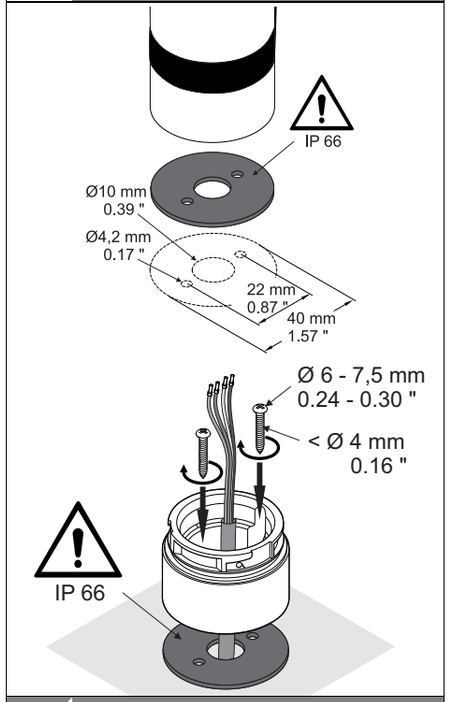

3 630 720 00 630 820 00

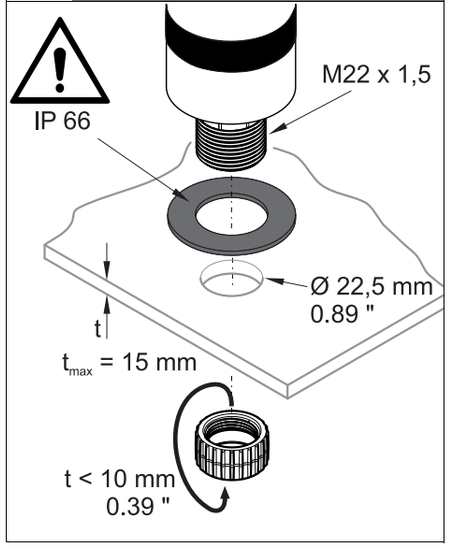

4 630 720 00, 630 820 00 + 960 630 02, 960 630 06

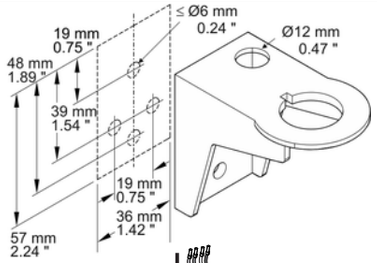

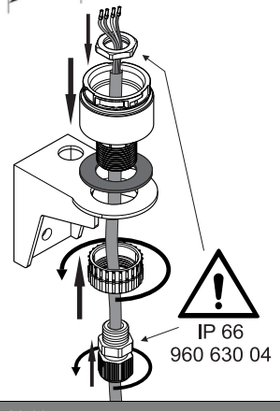

5 630 730 00 630 830 00

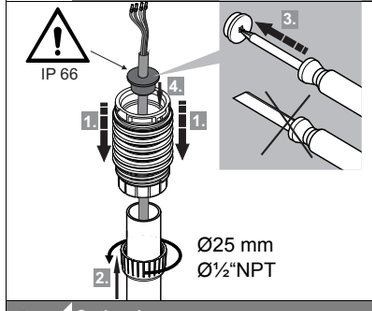

6 Optional 960 630 0x

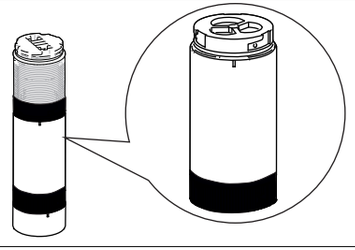

7 630 700 00 630 800 00

⚠ DANGER

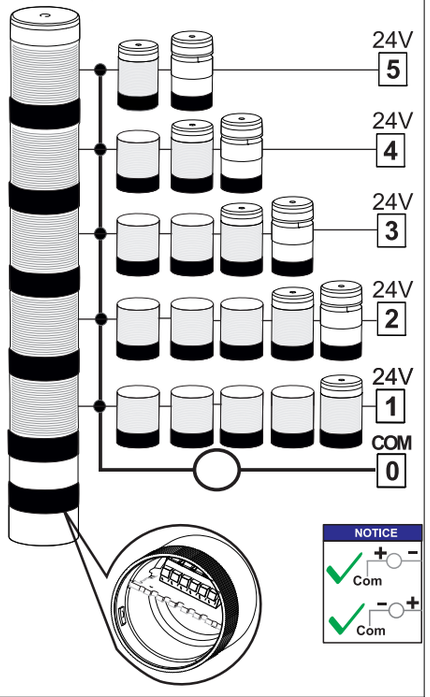

NOTICE
Multicolour 634 450 55

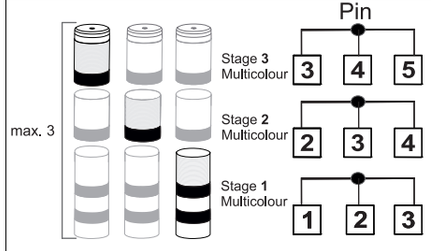

Colour (**RD**)	**24V**		
Colour (**GN**)		**24V**	
Colour (**YE**)	**24V**	**24V**	
Colour (**BU**)			**24V**
Colour (**WH**)	**24V**	**24V**	**24V**
Colour (**CYAN**)		**24V**	**24V**
Colour (**VIOL**)	**24V**		**24V**

7a 634

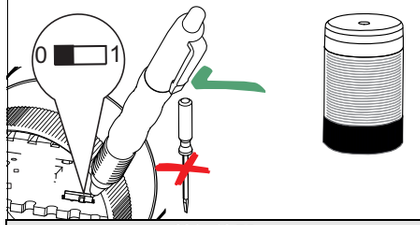

TwinLIGHT 634 x10 75, 634 x30 75

Dip-Schalter Dip-Switch	Leuchtbild Light effect
1	Dauerlicht Permanent light
0	Blinklicht Blinking light

TwinFLASH 634 x20 55, 634 x40 55

Dip-Schalter Dip-Switch	Leuchtbild Light effect
0	Blitzlicht Flashing light
1	EVS

7b 635 x00 75

⚠ WARNING

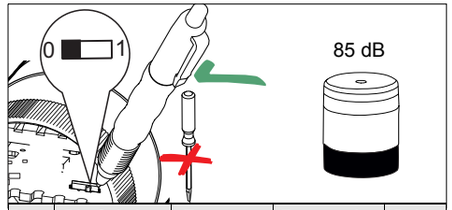

Tone	Dip-Schalter Dip-Switch	Tone type	Frequencies	Pulse
1	0		2900Hz	1 HZ
2	1		2900 Hz	

7c 635 x10 55

⚠ WARNING



3d

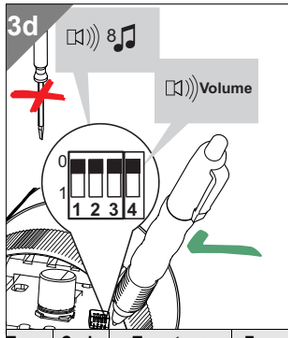

Tone	Code 1234	Tone type	Frequencies	Pulse
1	000x	Dauerton continuous,	4300 Hz	
2	100x	Dauerton continuous,	2100 Hz	
3	010x	pulsierend, pulse	4300 Hz	1 Hz
4	110x	pulsierend, pulse	2100 Hz	1 Hz
5	001x	pulsierend, pulse	4300 Hz	420 Hz
6	101x	pulsierend, pulse	2100 Hz	420 Hz
7	011x	pulsierend, pulse	4300 Hz	20 Hz
8	111x	Sweep	2100-4300 Hz	
Volume				
	000x	95 dB 89 dB		

8

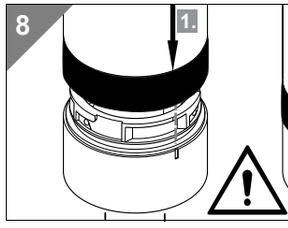

310.630.001.1015
©D

WERMA SIGNALTECHNIK