Mini cylinder, Series ICM

1333205000

- Ø 8 ... 32 mm
- Max. stroke: 400 mm
- corrosion-resistant
- Suitable for us in food processing

AVENTICS Series ICM Mini cylinders

The AVENTICS Series ICM is a mini cylinder and cost-efficient solution for high corrosion resistance and reliability – even in harsh environments. The cylinder tube and piston rod are made of stainless steel, the cylinder covers are fashioned from a high-quality polymer.





Technical data

Industry	Industrial
Standards	ISO 6432
Piston Ø	32 mm
Stroke	50 mm
Ports	G 1/8
Functional principle	Double-acting
Cushioning	Elastic cushioning
Magnetic piston	Piston with magnet
Environmental requirements	Industry standard suitable for use in food processing
Piston rod thread - type	External thread
Piston rod thread	M10x1,25
Piston rod	single
Scraper	Standard Industry Scraper
Pressure for determining piston forces	6,3 bar
Retracting piston force	435 N
Extracting piston force	506 N
Min. ambient temperature	-20 °C
Max. ambient temperature	70 °C
Min. working pressure	1 bar

Max. working pressure	10 bar
Weight 0 mm stroke	0.26 kg
Weight +10 mm stroke	0.022 kg
Stroke max.	400 mm
Medium	Compressed air
Min. medium temperature	-20 °C
Max. medium temperature	70 °C
Max. particle size	50 µm
Min. oil content of compressed air	0 mg/m³

Material

Piston rod	Stainless Steel
Scraper material	Polyurethane
Seal material	Acrylonitrile butadiene rubber
Material, front cover	Polyoxymethylene
Cylinder tube	Stainless Steel
End cover	Polyoxymethylene
Connection thread	Stainless Steel
Nut for cylinder mounting	Polyamide
Nut for piston rod	Stainless Steel
Part No.	1333205000

Technical information

Nut MR3 included in supply

The pressure dew point must be at least 15 °C less than ambient and medium temperature and may not exceed 3 °C.

The oil content of compressed air must remain constant during the life cycle.

Use only the approved oils from AVENTICS. Further information can be found in the “Technical information” document (available in https://www.emerson.com/en-us/support).

Dimensions

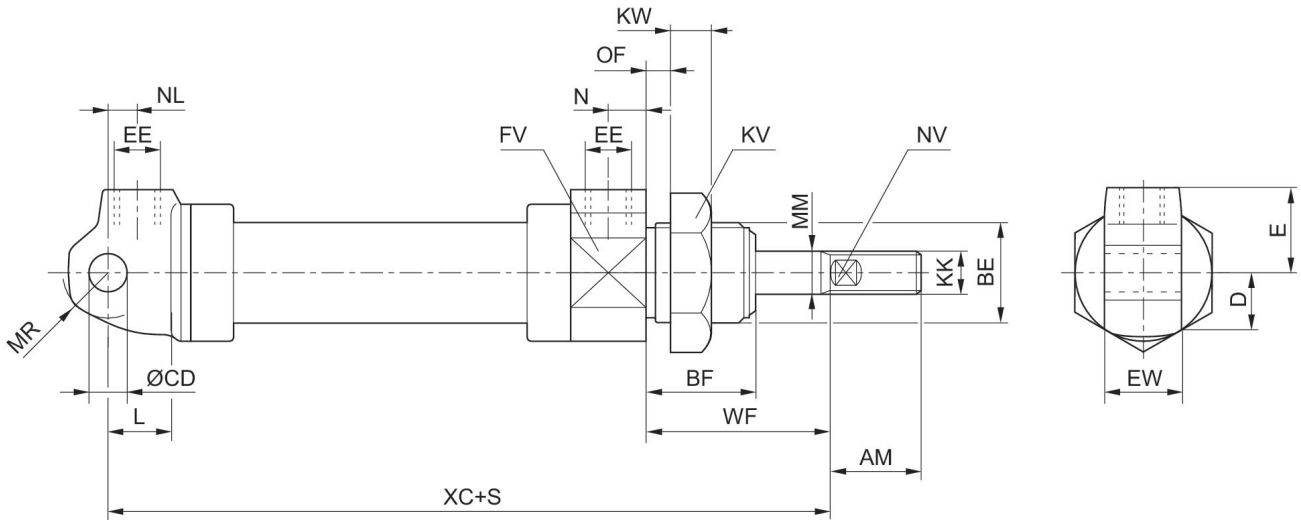

S = stroke

Piston Ø	AM +0/-2	BE	BF	CD H11	D	E	EE	EW d13	FV
12	16	M16x1,5	20	6	10	13.5	M5	12	20
16	16	M16x1,5	20	6	12	14	M5	12	24
20	20	M22x1,5	22	8	15	18	G 1/8	16	30
25	27	M22x1,5	22	8	17	18	G 1/8	16	34
32	32	M30x1,5	29	10	22.5	24	G 1/8	26	46

Piston Ø	KK	KV	KW	L	MM	MR	N	NL	NV
12	M6	24	7	9	6	7.5	5	7	4
16	M6	24	7	9	6	7.5	5	6	4
20	M8	30	8	12	8	10	8	7	6
25	M10x1,25	30	8	12	10	10	8	6.5	8
32	M10x1,25	41	11	13	12	15	10	10.5	11

Piston Ø	OF max.	WF ±1,2	XC ±1
12	10	22	75
16	10	22	82
20	10	24	95
25	10	23	104
32	14	38	128

Overview drawing

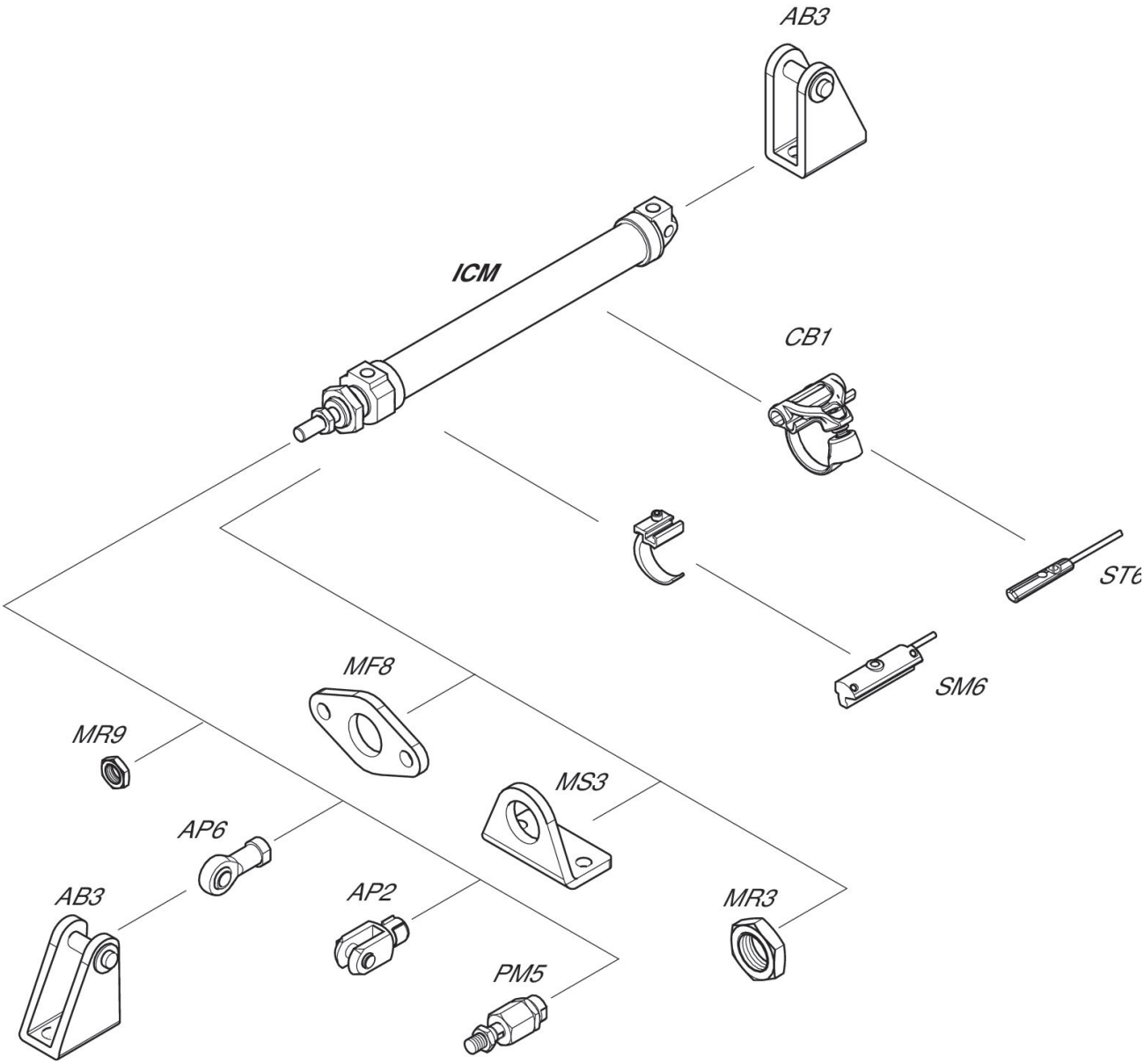

NOTE: This overview drawing is only for orientation to indicate where the various accessory parts can be fastened to the cylinder. The illustration has been simplified for this purpose. It is thus not possible to derive the dimensions from this overview.