THERMASGARD® TM 43
THERMASGARD® TM 65

Immersion / screw-in / duct temperature measuring transducer, calibratable, with multi-range switching and active output (Automatic Output Switching)

NEW

S+S REGELTECHNIK

Patented quality product (patent no. DE 10 2012 017 500.0 and DE 10 2015 015 941 B4)

Calibratable temperature measuring transducer **THERM**ASGARD® **TM 43**, with eight switchable measuring ranges (max. –20...+150 °C), active output, straight protective tube, housing made from impact-resistant plastic with snap-on lid (IP 54), optionally with or without display. The measuring transducer converts the measured variables into a standard signal of 0-10 V or 4...20 mA. Available as a U variant (3-wire) or I variant (2-wire).

Calibratable temperature measuring transducer **THERM**ASGARD® **TM 65**, with eight switchable measuring ranges (max. –20...+150 °C), active output, straight protective tube, housing made from impact-resistant plastic with with quick-locking screws (IP 67), optionally with or without display. The standard display can be changed from SI [°C] to imperial [°F] units via DIP switch. The measuring transducer converts the measured variables into a standard signal of 0-10 V or 4...20 mA. The unit with **Automatic Output Switching** (AOS) detects the required output type and automatically switches to U or I output. Alternatively, a **type version** (2-wire) with 2-wire connection and I output is available.

For the detection of temperatures in liquid or gaseous media. For aggressive media, stainless steel immersion sleeves must be used. It is used e.g. in piping systems, in heating technology, in storage tanks, in district heating compact stations, in hot-water and cold-water systems, in oil and lubricant circulation systems, in mechanical, apparatus and plant engineering as well as in the entire industrial sector. The sensor is factory-calibrated; an environmental precision adjustment by an expert is possible.

TM 43
with snap-on lid
(IP 54)



TM 65
with quick-locking screws
(IP 67)



TECHNICAL DATA

TM xx - U	
Power supply:	24 V AC / DC (± 10 %)
Load resistance:	R_L > 15 kOhm with U variant (**TM43**)
Connection type:	3-wire connection
Output:	**0-10 V**
TM xx - I	
Power supply:	15...36 V DC, depending on working resistance, residual ripple stabilised ± 0.3 V
Working resistance:	R_a (Ohm) = (U_b -14 V) / 0.02 A
Connection type:	2-wire connection
Output:	**4...20 mA**
TM xx - A (AOS)	
Power supply:	24 V AC / DC (± 10 %)
Load resistance:	R_L = 25...450 Ohm with **AOS** I variant R_L > 15 kOhm with **AOS** U variant
Connection type:	3-wire connection
Output:	**automatic 0-10 V / 4...20 mA** (via **Automatic Output Switching** – the unit detects the required output type and automatically switches to U or I output)
GENERAL	
Power consumption:	< 1.0 VA / 24 V DC; < 2.2 VA / 24 V AC
System of units:	**SI** (default) or **imperial** (**TM 65** can be changed via DIP switch)
Data points:	temperature [°C] [°F]
Measuring ranges:	**multi-range switching with 8 measuring ranges,** see table (other ranges optional) **with manual zero point correction (± 10 K)**
Sensor:	Pt1000, DIN EN 60751, class B (**Perfect Sensor Protection**)
Deviation, temperature:	typically ± 0.2 K at +25 °C
Protective tube:	stainless steel, **V4A** (1.4571), Ø = 6 mm, inserted length (EL) = 50 - 400 mm (see table)
Housing:	plastic, UV-resistant, material polyamide, 30 % glass-globe reinforced, colour traffic white (similar to RAL 9016), housing cover for display is transparent! **TM 43 with snap-on lid** **TM 65 with quick-locking screws** (slotted / Phillips head combination)
Housing dimension:	72 x 64 x 37.8 mm (Typ 1 without display) 72 x 64 x 43.3 mm (Typ 1 with display)
Cable connection:	**cable gland**, plastic (M 16 x 1.5; with strain relief, exchangeable, max. inner diameter 10.4 mm) **or** **M12 connector** according to DIN EN 61076-2-101 (optional on request)
Electrical connection:	0.14 - 1.5 mm², via terminal screws
Ambient temperature:	measuring transducer –30...+70 °C
Permitted humidity:	< 95 % RH, non-precipitating air
Protection class:	III (according to EN 60730)
Protection type:	**TM 43 IP 54** (according to EN 60529)* Housing tested, TÜV SÜD, Report No. 713160960A (Typ 01) **TM 65 IP 67** (according to EN 60529)* Housing tested, TÜV SÜD, Report No. 713139052 (Typ 1) * Housing in the built-in state
Standards:	CE conformity, electromagnetic compatibility according to EN 61326, according to EMC directive 2014 / 30 / EU
Optional:	two-line **display with illumination**, cutout approx. 36 x 15 mm (W x H), for displaying the ACTUAL temperature and the internal diagnostics (sensor breakage, sensor short circuit)
ACCESSORIES	(see table)

Display and internal diagnostics
THERMASGARD®
Measuring transducer with display



Temperature [°C]



Temperature [°F]



Sensor breakage



Sensor short circuit

S+S REGELTECHNIK

NEW

THERMASGARD® TM 43
THERMASGARD® TM 65

Immersion / screw-in / duct temperature measuring transducer, calibratable, with multi-range switching and active output (Automatic Output Switching)

Dimensional drawing
[mm]

TM 43
TM 65

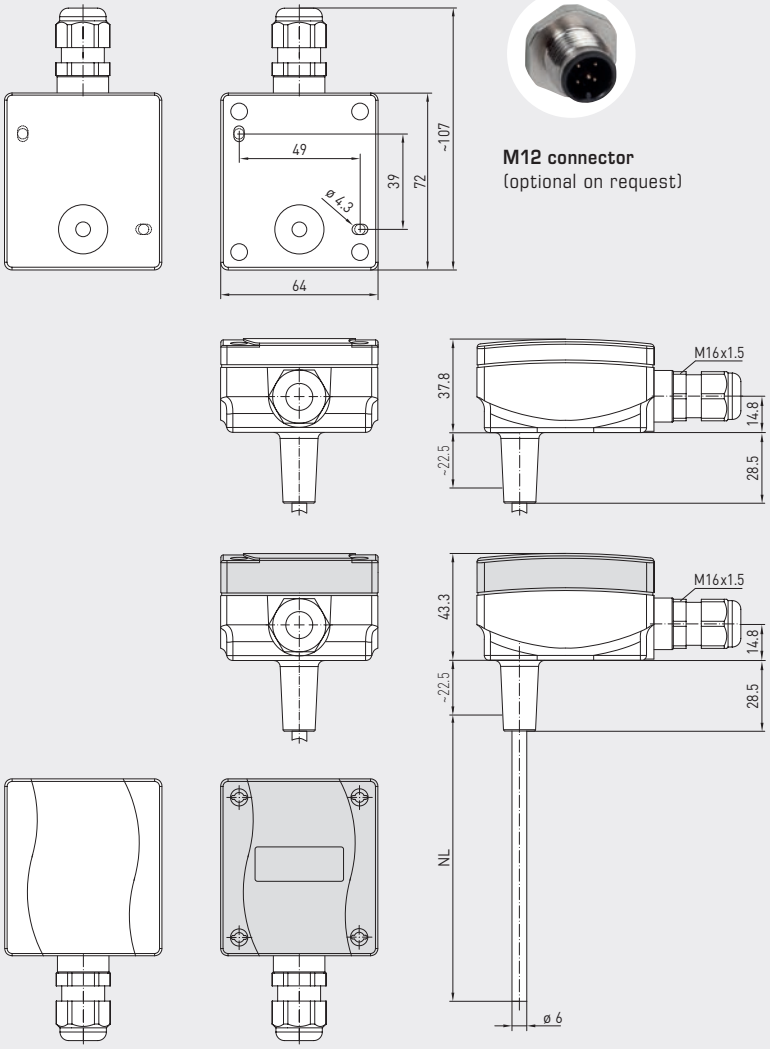

M12 connector
(optional on request)

with snap-on lid

with quick-locking screws

TM 43
with display and snap-on lid
(IP 54)



TM 65
with display and quick-locking screws
(IP 67)



SI IMP

High-performance encapsulation against vibration, mechanical stress and humidity

PS-PROTECTION
PERFECT SENSOR PROTECTION

Automatic detection and switching to standard signal 0...10 V or 4...20 mA

AOS-PATENTED
AUTOMATIC OUTPUT SWITCHING



TM 65
Basic device
with accessories

+49 (0) 911 / 5 19 47-0
mail@SplusS.de
www.SplusS.de
S+S REGELTECHNIK

THERMASGARD® TM 43
THERMASGARD® TM 65

Immersion / screw-in / duct temperature measuring transducer, calibratable, with multi-range switching and active output (Automatic Output Switching)

NEW

S+S REGELTECHNIK

Schematic diagram **TM 43**

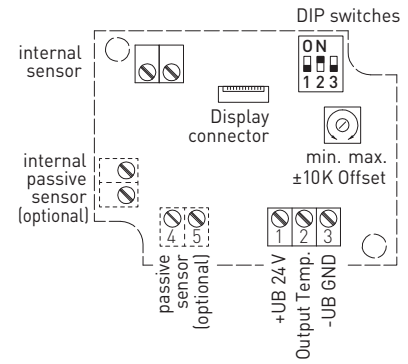

Schematic diagram **TM 65**

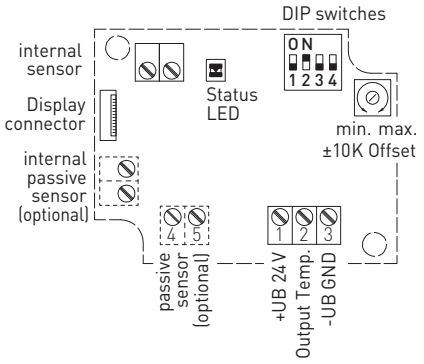

3-wire connection **TM xx - U**

1 +UB 24V AC/DC
2 Output Temp. 0-10V
3 –UB GND

2-wire connection* **TM xx - I**

1 +UB 24V DC
2 Output Temp. 4...20mA
3 –UB GND (optional for backlighting)

* 2-wire connection for devices with / without display (not illuminated)
3-wire connection for devices with illuminated display

3-wire connection (AOS) **TM xx - A**

1 +UB 24V AC/DC
2 Output Temp. 0-10V / 4...20mA
3 –UB GND

Pin assignment (M12) **TM xx**

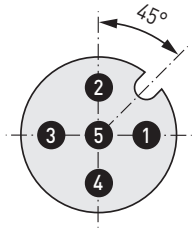

1 +UB 24V
2 Output temperature
3 free
4 –UB GND
5 Shield

Load resistance diagram (2-wire) **TM xx - I**

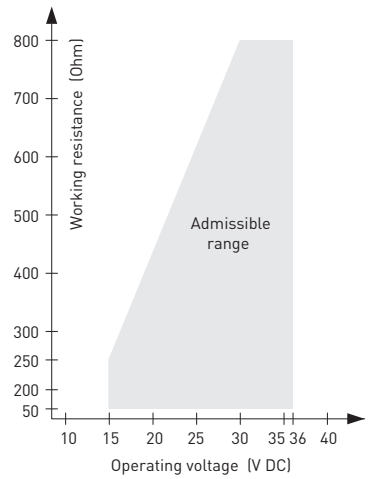

Measuring ranges [°C] (adjustable)	DIP 1	DIP 2	DIP 3
–20...+150 °C	**ON**	**ON**	**ON**
–50... +50 °C	OFF	**ON**	**ON**
–20... +80 °C	**ON**	OFF	**ON**
–30... +60 °C	OFF	OFF	**ON**
0... +40 °C	**ON**	**ON**	OFF
0... +50 °C (default)	OFF	**ON**	OFF
0...+100 °C	**ON**	OFF	OFF
0...+150 °C	OFF	OFF	OFF

Display (switchable)		DIP 4
Imperial	[°F]	**ON**
SI (default)	[°C]	OFF

TM 65
Display
Temperature [°C] → [°F]
The display value depends on the set unit system (**DIP4**).

SI IMP

For further technical information, see the operating instructions



TM 43
(IP 54)





TM 65
(IP 67)



SI IMP

S+S REGELTECHNIK

NEW

THERMASGARD® TM 43
THERMASGARD® TM 65

Immersion / screw-in / duct temperature measuring transducer, calibratable, with multi-range switching and active output (Automatic Output Switching)

THERMASGARD® TM 43 — Temperature measuring transducer (basic device with snap-on lid), *Standard*

Type / WG01B	Output	Inserted Length (EL)	Display	Item No.	Price
TM 43 - I	(2-wire)			IP 54	
TM43-I 50mm	4...20 mA	50 mm		1101-7112-0019-900	74,46 €
TM43-I 50mm **LCD**	4...20 mA	50 mm	■	1101-7112-2019-900	142,81 €
TM43-I 100mm	4...20 mA	100 mm		1101-7112-0029-900	75,68 €
TM43-I 100mm **LCD**	4...20 mA	100 mm	■	1101-7112-2029-900	144,02 €
TM43-I 150mm	4...20 mA	150 mm		1101-7112-0039-900	76,79 €
TM43-I 150mm **LCD**	4...20 mA	150 mm	■	1101-7112-2039-900	145,14 €
TM43-I 200mm	4...20 mA	200 mm		1101-7112-0049-900	77,16 €
TM43-I 200mm **LCD**	4...20 mA	200 mm	■	1101-7112-2049-900	145,51 €
TM43-I 250mm	4...20 mA	250 mm		1101-7112-0059-900	78,44 €
TM43-I 250mm **LCD**	4...20 mA	250 mm	■	1101-7112-2059-900	147,58 €
TM43-I 300mm	4...20 mA	300 mm		1101-7112-0069-900	79,72 €
TM43-I 300mm **LCD**	4...20 mA	300 mm	■	1101-7112-2069-900	148,06 €
TM 43 - U	(3-wire)			IP 54	
TM43-U 50mm	0-10 V	50 mm		1101-7111-0019-900	74,46 €
TM43-U 50mm **LCD**	0-10 V	50 mm	■	1101-7111-2019-900	142,81 €
TM43-U 100mm	0-10 V	100 mm		1101-7111-0029-900	75,68 €
TM43-U 100mm **LCD**	0-10 V	100 mm	■	1101-7111-2029-900	144,02 €
TM43-U 150mm	0-10 V	150 mm		1101-7111-0039-900	76,79 €
TM43-U 150mm **LCD**	0-10 V	150 mm	■	1101-7111-2039-900	145,14 €
TM43-U 200mm	0-10 V	200 mm		1101-7111-0049-900	77,16 €
TM43-U 200mm **LCD**	0-10 V	200 mm	■	1101-7111-2049-900	145,51 €
TM43-U 250mm	0-10 V	250 mm		1101-7111-0059-900	78,44 €
TM43-U 250mm **LCD**	0-10 V	250 mm	■	1101-7111-2059-900	147,58 €
TM43-U 300mm	0-10 V	300 mm		1101-7111-0069-900	79,72 €
TM43-U 300mm **LCD**	0-10 V	300 mm	■	1101-7111-2069-900	148,06 €

THERMASGARD® TM 65 — Temperature measuring transducer (basic device with quick-locking screws), *Premium*

Type / WG01		Output	Inserted Length (EL)	Display	Item No.	Price
TM 65 - I		(2-wire)			IP 67	
TM65-I 50mm		4...20 mA	50 mm		1101-7122-0019-900	103,19 €
TM65-I 50mm **LCD**		4...20 mA	50 mm	■	1101-7122-2019-900	155,64 €
TM65-I 100mm		4...20 mA	100 mm		1101-7122-0029-900	103,47 €
TM65-I 100mm **LCD**		4...20 mA	100 mm	■	1101-7122-2029-900	155,91 €
TM65-I 150mm		4...20 mA	150 mm		1101-7122-0039-900	103,70 €
TM65-I 150mm **LCD**		4...20 mA	150 mm	■	1101-7122-2039-900	156,17 €
TM65-I 200mm		4...20 mA	200 mm		1101-7122-0049-900	103,92 €
TM65-I 200mm **LCD**		4...20 mA	200 mm	■	1101-7122-2049-900	156,37 €
TM65-I 250mm		4...20 mA	250 mm		1101-7122-0059-900	104,25 €
TM65-I 250mm **LCD**		4...20 mA	250 mm	■	1101-7122-2059-900	156,69 €
TM65-I 300mm		4...20 mA	300 mm		1101-7122-0069-900	105,03 €
TM65-I 300mm **LCD**		4...20 mA	300 mm	■	1101-7122-2069-900	157,46 €
TM65-I 400mm		4...20 mA	400 mm		1101-7122-0089-900	107,14 €
TM65-I 400mm **LCD**		4...20 mA	400 mm	■	1101-7122-2089-900	159,60 €
TM 65 - A	*	(3-wire AOS)			IP 67	
TM65-A 50mm		0-10 V / 4...20 mA	50 mm		1101-712E-0019-900	103,19 €
TM65-A 50mm **LCD**		0-10 V / 4...20 mA	50 mm	■	1101-712E-2019-900	155,64 €
TM65-A 100mm		0-10 V / 4...20 mA	100 mm		1101-712E-0029-900	103,47 €
TM65-A 100mm **LCD**		0-10 V / 4...20 mA	100 mm	■	1101-712E-2029-900	155,91 €
TM65-A 150mm		0-10 V / 4...20 mA	150 mm		1101-712E-0039-900	103,70 €
TM65-A 150mm **LCD**		0-10 V / 4...20 mA	150 mm	■	1101-712E-2039-900	156,17 €
TM65-A 200mm		0-10 V / 4...20 mA	200 mm		1101-712E-0049-900	103,92 €
TM65-A 200mm **LCD**		0-10 V / 4...20 mA	200 mm	■	1101-712E-2049-900	156,37 €
TM65-A 250mm		0-10 V / 4...20 mA	250 mm		1101-712E-0059-900	104,25 €
TM65-A 250mm **LCD**		0-10 V / 4...20 mA	250 mm	■	1101-712E-2059-900	156,69 €
TM65-A 300mm		0-10 V / 4...20 mA	300 mm		1101-712E-0069-900	105,03 €
TM65-A 300mm **LCD**		0-10 V / 4...20 mA	300 mm	■	1101-712E-2069-900	157,46 €
TM65-A 400mm		0-10 V / 4...20 mA	400 mm		1101-712E-0089-900	107,14 €
TM65-A 400mm **LCD**		0-10 V / 4...20 mA	400 mm	■	1101-712E-2089-900	159,60 €
Automatic Output Switching:	*	patented analogueinterface (patent no. DE 10 2015 015 941 B4) Unit automatically detects the required output type 0-10 V or 4...20 mA.				
Extra charge:		Cable connection with **M12 connector** according to DIN EN 61076-2-101			on request	

THERMASGARD® TM 43
THERMASGARD® TM 65

Immersion / screw-in / duct temperature measuring transducer, calibratable, with multi-range switching and active output (Automatic Output Switching)

S+S REGELTECHNIK

One basic device in four variants ...



TM xx +
TH 08-ms / xx

Immersion / screw-in temperature sensor with immersion sleeve, brass, nickel-plated / galvanised



PATENTED
DE 10 2012 017 500.0

TM xx +
TH 08-VA / xx

Immersion / screw-in temperature sensor with immersion sleeve, stainless steel, V4A



TM xx +
TH 08-VA / xx / 90

Immersion / screw-in temperature sensor with immersion sleeve with neck tube, stainless steel, V4A



TM xx +
MF-15-K

Duct temperature sensor with mounting flange, plastic

Dimensional drawing
TH 08-ms / xx
[mm]

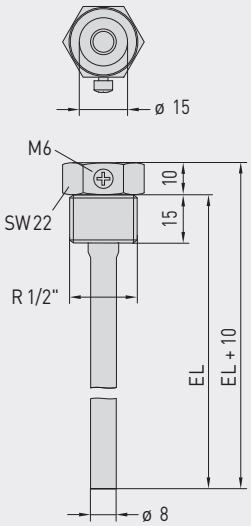

Dimensional drawing
TH 08-VA / xx
[mm]

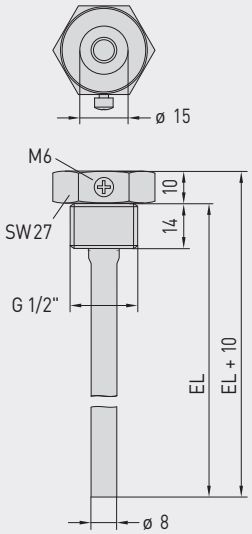

Dimensional drawing
TH 08-VA / xx / 90
[mm]

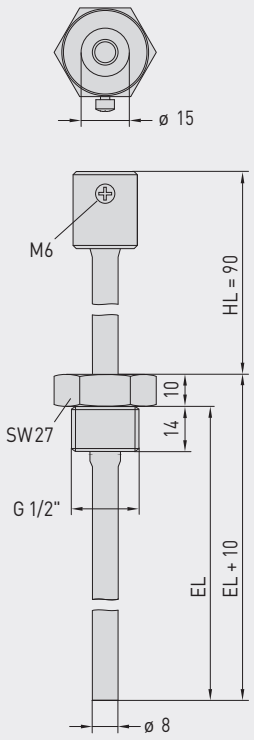

Dimensional drawing
MF-15-K
[mm]

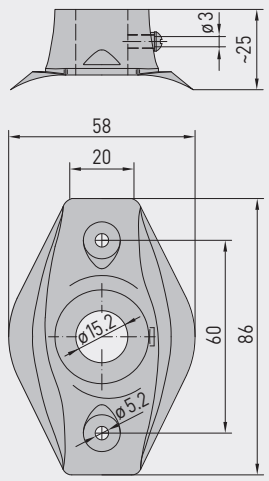

... through combination with accessories:



TH 08-ms/xx

Immersion sleeve,
brass, nickel-plated / galvanised,
thread-sealing, conical,
according to DIN 10226



TH 08-VA/xx

Immersion sleeve,
stainless steel, V4A,
flat-sealing, cylindrical,
according to DIN 228



TH 08-VA/xx/90

Immersion sleeve with neck tube,
stainless steel, V4A,
flat-sealing, cylindrical,
according to DIN 228



MF-15-K

Mounting flange,
plastic

THERMASGARD® TH 08 Immersion sleeve Ø 8 mm (Accessories)					
Type / WG01B	**p_{max} (static)**	**T_{max}**	**Inserted Length (EL)**	**Item No.**	**Price**
TH 08-ms/xx	**Brass nickel-plated / galvanised**			without neck tube	
TH08-MS 50MM	10 bar	+150 °C	**50 mm**	7100-0011-0010-132	**12,90 €**
TH08-MS 100MM	10 bar	+150 °C	**100 mm**	7100-0011-0020-132	**13,50 €**
TH08-MS 150MM	10 bar	+150 °C	**150 mm**	7100-0011-0030-132	**14,60 €**
TH08-MS 200MM	10 bar	+150 °C	**200 mm**	7100-0011-0040-132	**15,62 €**
TH08-MS 250MM	10 bar	+150 °C	**250 mm**	7100-0011-0050-132	**18,09 €**
TH08-MS 300MM	10 bar	+150 °C	**300 mm**	7100-0011-0060-132	**18,90 €**
TH08-MS 350MM	10 bar	+150 °C	**350 mm**	7100-0011-0070-132	**19,40 €**
TH08-MS 400MM	10 bar	+150 °C	**400 mm**	7100-0011-0080-132	**19,90 €**
TH 08-VA/xx	**Stainless steel, V4A** (1.4571)			without neck tube	
TH08-VA 50MM	40 bar	+600 °C	**50 mm**	7100-0012-0010-132	**22,24 €**
TH08-VA 100MM	40 bar	+600 °C	**100 mm**	7100-0012-0020-132	**24,50 €**
TH08-VA 150MM	40 bar	+600 °C	**150 mm**	7100-0012-0030-132	**26,50 €**
TH08-VA 200MM	40 bar	+600 °C	**200 mm**	7100-0012-0040-132	**27,80 €**
TH08-VA 250MM	40 bar	+600 °C	**250 mm**	7100-0012-0050-132	**34,60 €**
TH08-VA 300MM	40 bar	+600 °C	**300 mm**	7100-0012-0060-132	**36,20 €**
TH08-VA 350MM	40 bar	+600 °C	**350 mm**	7100-0012-0070-132	**36,90 €**
TH08-VA 400MM	40 bar	+600 °C	**400 mm**	7100-0012-0080-132	**37,90 €**
TH 08-VA/xx/90	**Stainless steel, V4A** (1.4571)			**with neck tube** (90 mm)	
TH08-VA 50/90MM	40 bar	+600 °C	**50 mm**	7100-0012-0012-132	**29,91 €**
TH08-VA 100/90MM	40 bar	+600 °C	**100 mm**	7100-0012-0022-132	**31,26 €**
TH08-VA 150/90MM	40 bar	+600 °C	**150 mm**	7100-0012-0032-132	**32,80 €**
TH08-VA 200/90MM	40 bar	+600 °C	**200 mm**	7100-0012-0042-132	**34,19 €**
TH08-VA 250/90MM	40 bar	+600 °C	**250 mm**	7100-0012-0052-132	**35,83 €**
TH08-VA 300/90MM	40 bar	+600 °C	**300 mm**	7100-0012-0062-132	**38,84 €**
Note:	inner diameter of socket 15.0 mm For further information see last chapter!				

Mounting flange (Accessories)				
Type / WG01B		**T_{max}**	**Item No.**	**Price**
MF				
MF-15-K	**Mounting flange,** plastic, 56.8 x 84.3 mm, Ø 15.2 mm tube gland	+100 °C	7100-0032-0000-000	**6,30 €**
Note:	For further information see last chapter!			