compatible with you

SSW7-RK512

Adapter for MPI Bus with RK512 Protocol

700-751-5VK21

User Manual

Version: 1 / 20.03.2009

HW: 1 / FW: 2.02 and later

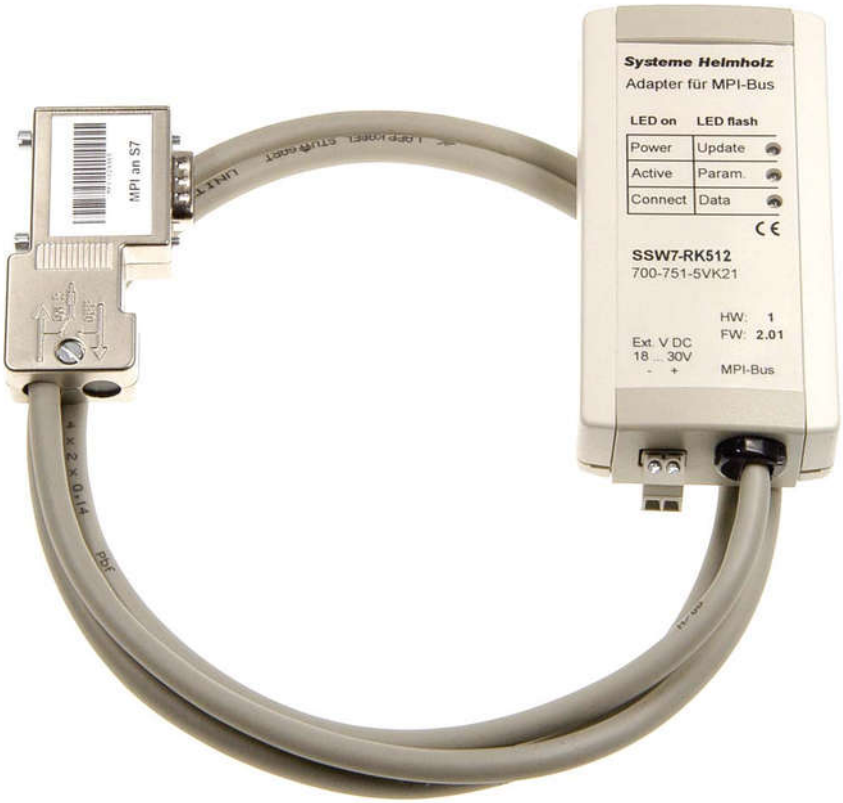

Order number of manual: 700-751-5VK21

***Systeme Helmholz* GmbH** ● Hannberger Weg 2 ● D-91091 Großenseebach

Phone: +49 9135 7380-0 ● Fax: +49 9135 7380-110 ● E-Mail: info@helmholz.de ● Internet: www.helmholz.de

All rights are reserved, including those of translation, reprinting, and reproduction of this manual, or parts thereof. No part of this manual may be reproduced, processed, copied, or transmitted in any way whatsoever (photocopy, microfilm, or other method) without the express written permission of Systeme Helmholz GmbH, not even for use as training material, or using electronic systems. All rights reserved in the case of a patent grant or registration of a utility model or design.

Copyright © 2009 by

Systeme Helmholz GmbH

Hannberger Weg 2, 91091 Grossenseebach, Germany

Note:

We have checked the content of this manual for conformity with the hardware and software described. Nevertheless, because deviations cannot be ruled out, we cannot accept any liability for complete conformity. The information in this manual is regularly updated. When using purchased products, please heed the latest version of the manual, which can be viewed in the Internet at www.helmholz.de, from where it can also be downloaded.

Our customers are important to us. We are always glad to receive suggestions for improvement and ideas.

Step and SIMATIC are registered trademarks of SIEMENS

Design

The SSW7-RK512 enables the conversion of a serial interface (RS232 level, 9.6 to 115 Kbaud) with the RK512 protocol to the MPI bus (RS485 level, fixed 187.5Kbaud) for connecting operator terminals or visualization software.

The SSW7-RK512 has a 1.2m long connecting cable that can be directly plugged into the CPU connector of the PLC or at any other point in the MPI network.

A nine-way D-sub connector with a pin assignment suitable for a standard PC null modem cable is contained in the housing of the SSW7.

The SSW7-RK512 receives its power supply from the CPU via the MPI cable. If 24V are not available at the point of connection or if several SSW7s are connected to a CPU at the same time, the 24V power supply can be fed from an external source.

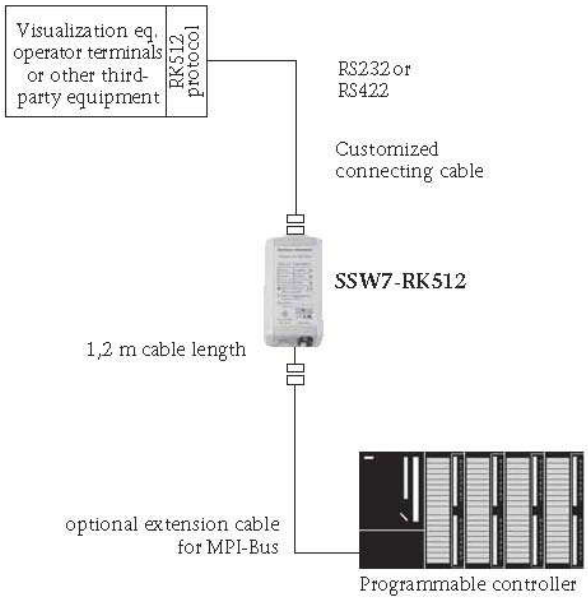

The connection to the MPI bus can be extended with an additional cable. For that purpose, Systeme Helmholz GmbH offers the following products:

MPI bus extension cable, 5m	700-751-6VK11
MPI bus extension cable, 10m	700-751-6VK21
MPI bus extension cable, special length	700-751-6SO11

When extending the MPI bus, please follow the relevant configuring guidelines as defined in the documentation of your PLC.

The SSW7 and the extension cable do not contain *any* terminating resistors.

A standard rail bracket (700-751-HSH01) is available for the SSW7-RK512.



A variant of the SSW7-RK512 with an RS422 interface is also available (700-752-1VK11).

Transmission

The SSW7-RK512 converts the RK512 protocol to the MPI bus. the RK 512 protocol transmits data with the 3964/R procedure. The BCC of the 3964/R procedure is always activated in the SSW7-RK512. The transmission format is predefined as 8 data bits, even parity, and 1 stop bit.

Data words, flags, input and output bytes can be transmitted. In general, only fetch and send requests from the serial partner are supported. The programmable controller cannot access the SSW7-RK512 or the communication partner behind it on its own initiative.

As the RK512 protocol only supports word-oriented addressing of data words, the word address is converted to a corresponding byte address. If DW10 is specified as the source or destination address, the SSW7-RK512 requests DBW20 (DBB20 & DBB21) from the CPU. In the case of inputs, outputs, and flags, however, both the RK512 and the MPI bus are byte oriented, i.e. there is no conversion.

The SSW7-RK512 supports continuation frames for which the standard block size is 128 bytes. The highest addressable byte address is 255 and the highest word address is 254.

The SSW7-RK512 is set to address 5 in the factory and establishes a connection with address 2. The destination address and the local address can be set in DB0. The SSW7-RK512 first signs on to the bus and then establishes a connection with the destination CPU if a valid RK512 frame has been received from the serial partner.

A description of the RK512 protocol is available on request.

Extended protocol

In addition to the standard RK512 protocol, the SSW7-RK512 also contains a proprietary protocol extension for addressing all memory areas of S7 controllers.

Before the protocol extension can be used, the protocol driver on the PC or operator terminal must be adapted by the manufacturer. A description of the extended RK512 protocol is available on request.

Parameterization

Data block 0

The RK512 protocol has not been developed for communication with several nodes in a network. To allow communication with several nodes of an MPI network or to operate several adapters in a network nevertheless, it is possible to set the local address and the destination address of the adapter with an RK512 frame.

To do this you must send an RK512 frame from the PC (operator terminal, etc.) to the DB0. The adapter has its own DB0 in which the following parameters can be defined:

DW0	=	*reserved*
DW1	=	*reserved*
DW2	=	Address of the SSW7-RK512 in the MPI network (default: 5)
DW3	=	Address of the destination CPU (default: 2)
DW4	=	Highest station address (default: 15)
DW5-10	=	Timeout times

You can only set the local address of the adapter and the highest station address before you have sent a normal RK512 frame to a PLC for the first time after Power On. You can change the destination CPU address at any time.

Of course, the RK512 frame to the DB0 *will not* be sent on to the PLC. The DB0 can also be read out.

SHTools V3

The parameters of SSW7-RK512 can also be set with Windows program SHTools V3.03. The settings are then permanently stored in the adapter, i.e. even after Power Off the adapter automatically works with the set parameters.

SHTools V3 can also be used to test the SSW7-RK512 and install a new operating system on it.

The latest version can be downloaded from the download page in the Internet at www.helmholz.de

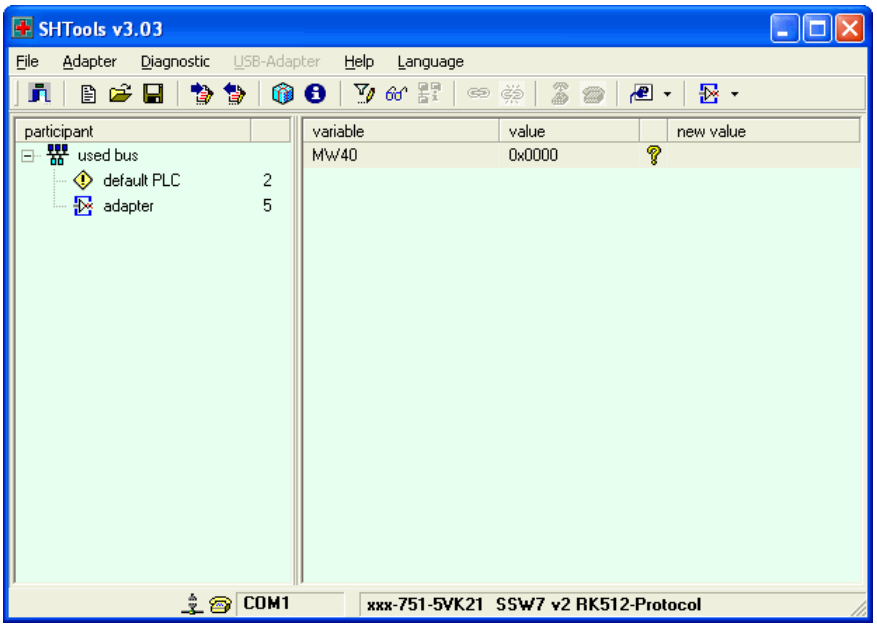

LED displays

The three LEDs on the top of the device provide you with information about the operating status of the SSW7. You can use them to locate sources of error quickly.

The LEDs have three different states: Off, on, blinking. If the LED is off, none of the labeled states apply.

Upper LED off:	The adapter has no power or is defective
Upper LED on:	The adapter is being supplied with 24V and the processor is in operation
Upper LED blinking:	SSW7-RK512
Center LED on:	The SSW7-RK512 is registered in the MPI network
Center LED blinking:	The SSW7-RK512 has invalid parameterization
Lower LED on:	The SSW7-RK512 has established a connection
Lower LED blinking:	The SSW7-RK512 is transmitting data

Error numbers

Code hex.	Code dec.	Description
Source: RK512 receiver		
10	16	Syntax error
11	17	Unknown command (only "E" and "A" are possible)
12	18	Unknown object identifier (only "D,M,E,A" are possible)
13	19	Length error
14	20	Illegal MPI destination address (DW3 in DB0)
15	21	Flash cannot be written to
16	22	Unusable time parameters
1F	31	Timeout MPI bus
20	32	DB does not exist or is too short
Source: Destination CPU		
30	48	Local MPI address collides with exist. address on bus
31	49	Incorrect protocol execution, link disconnected
32	50	Receive response to old request
33	51	Unexpected disconnection
34	52	Incorrect response received
35	53	Logical connection rejected (too many channels assigned)
37	55	Frame sequence error
38	56	Unexpected response received
39	57	Destination CPU does not respond
3A	58	Logical connection cannot be established
3B	59	Connection buildup aborted
3C	60	Destination CPU not in ring
3D	61	Too many retries during connection

Technical data

Order number	SSW7-RK512 700-751-5VK21
Dimensions	105 x 53 x 29 mm (LxWxH)
Weight	approx. 180g (incl. MPI cable & connector)
MPI interface	
Type:	RS485, electr. isolated
Transmission rate:	187.5 kbit/s
Cable:	1.2m, *no terminating resistors*
Connection:	Connector, SUB D 9 way
Communication interface	
Type:	RS232, serial asynchronous
Transmission rate:	19.2 kbit/s to 115 kbit/s *automatic detection !*
Connection:	Connector, SUB D 9-way
Power supply	
Voltage:	+24V DC±25%, from the programmable controller or external supply (polarized)
Current consumption (max.):	70 mA
Degree of protection	IP 30
Electromagnetic compatibility (EMC)	
Interference emission	Class B acc. to EN55022
Interference immunity on signal lines	±2kV acc. to EN61000-4-4
Interference immunity ESD	±6kV contact discharge EN61000-4-2 ±8kV air discharge EN61000-4-2
RF radiation fields	10V/m acc. to EN61000-4-3
Conducted RF interference	10V acc. to EN61000-4-6
Climatic conditions	
Temperature during operation	-20° C to +60°C
Temp. storage/transport	-20° C to +60°C
Relative humidity operation	5% to 85% at 30°C (no condensation)
Relative humidity storage	5% to 93% at 40°C (no condensation)
Special features	
Quality assurance	acc. to ISO 9002
Maintenance	Maintenance free (no battery)

Pin assignment

Pin	SubD connector PC	SubD connector MPI
1	-	n.c.
2	Rx	M24V
3	Tx	DATA.B
4	DTR	RTS AS
5	GND	0V (M5V)
6	DSR	n.c.
7	RTS	+24V
8	CTS	DATA.A
9	-	RTS PG

Connecting cables

MPI extension cable (700-751-6VKx1):

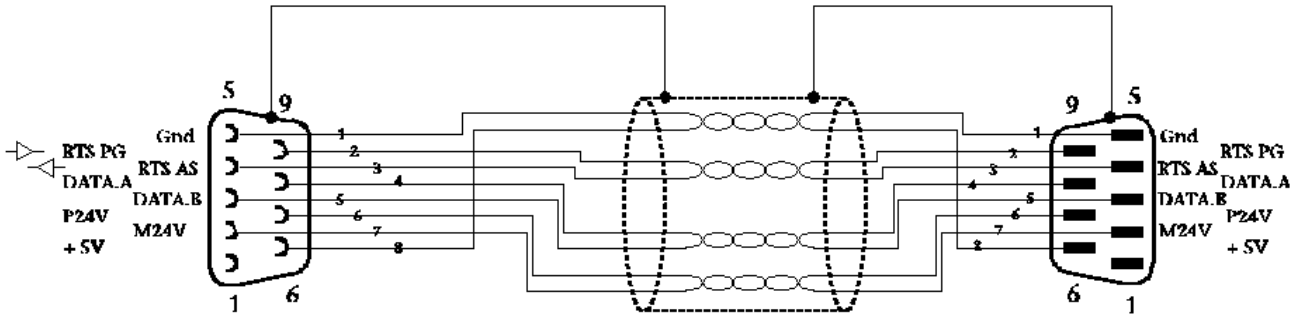

PC to SSW7-RK512 (700-751-7VKx1):

