Product Description

- Low Thermal Resistance
- KTP-0 (A) Suitable for KSI / KSJ / KSIA / KSID / KSQM / KWR / KMB / KMC / KYR single phase relay
- KTP-1 Suitable for KMS / KMT / KYRT / KMTY / KSQC Three Phase Relay
- KTP-2 Suitable for KSIM Mini Single Phase Relay
- Adhesive on One Side (Optional)
- Silicon Resin / Glass Fiber or Graphite
- RoHS Compliant



KTP-0



KTP-0A



KTP-1



KTP-2

Ordering Information

KTP	-0	A
KTP Series	0: Single Phase 1: Three Phase 2: Mini Single Phase	A: Adhesive on One Side Blank: without Adhesive

General Specifications

Color		Black
Thickness		0.15mm
Material	KTP-0A	Silicon Resin or Glass Fiber
	KTP-2	Silicon Resin or Glass Fiber
	KTP-0	Graphite
	KTP-1	Graphite
Adhesive One Side	KTP-0 (A)	Optional
Thermal Resistance		0.48°C-in2 / W@25 psi
Thermal Conductivity		2.0W/m-K
Flame Rating		V-0
Continuous Temperature Range		-60°C ~180°C
Storage Conditions	KTP-0A	Temperature: 23~27°C Humidity: 65±20%rh
Weight (Typical)	KTP-0 (A)	0.4g
	KTP-1	0.9g
	KTP-2	0.16g

Outline Dimensions

KTP-0

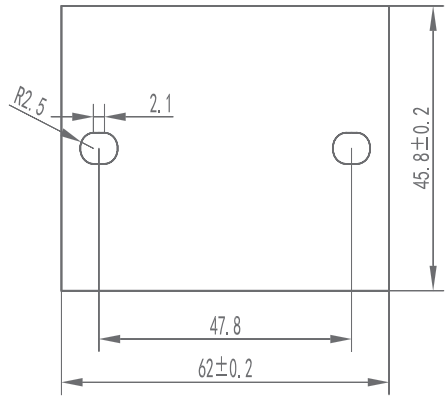

KTP-0(A)

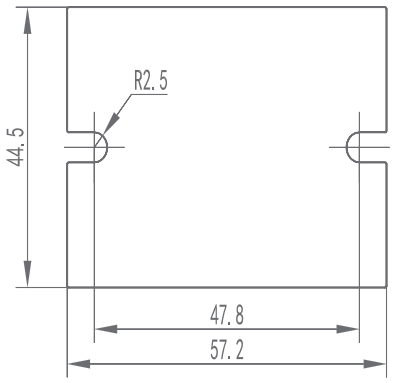

KTP-1

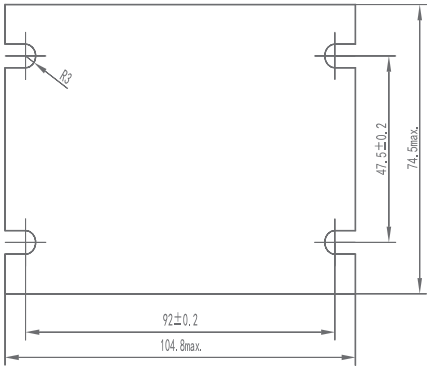

KTP-2

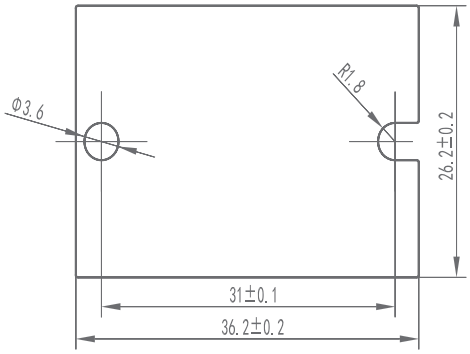

Agency Approvals (Certification)

Trademark Change Notification

Due to the company's strategic development needs, Xiamen Kudom Electronics Technology Co., Ltd will be acquired by i-Autoc (Xiamen) Investment Co., Ltd from 1st of July 2019. After the acquisition, all the products by Xiamen Kudom Electronics Technology Co., will no longer use Kudom trademark, but use i-Autoc trademark. The details of the change are as follows.

The original trademark KUDOM will be changed to i-Autoc. The original trademark KUDOM will still be used until 30th June 2019.

This is a change to the trademark only, the Company Name, Manufacturing Location, Management Team, Product Part Numbers and Safety Approval Licence Numbers (cUL, TUV, CCC, S-mark Etc) are to remain the same.