CONTACTLESS JOYSTICK - STOCK NO. 440-7922

OCS - 7000 INDUCTIVE SERIES

The **RS** contactless joystick employs an inductive sensing system and is recommended for applications where extreme length of service life is required. The joystick is designed to give an output voltage swing directly comparable with 270° potentiometers in a 55° joystick, i.e. giving a voltage swing equivalent to + and -10% of the supply voltage.

A square limiter plate is supplied fitted to the joystick body to control the throw of the stick, this limiter plate has a choice of 2 orientations: square to the body or at 45° to the body.

An alternative round limiter plate is supplied together with a mounting bezel. These may be fitted to suit the application. Limiter replacement requires removal of joystick knob by upward pull - Remove protective gaiter - prise out limiter plate. The refit is reverse of removal.

NOTE. *- Extreme care must be used to prevent ingress of dirt or dust while the gaiter is removed.*
Joystick may be mounted sub-panel, or as 'Drop-In'.
Bezel must be used where installation is 'Drop-In' to secure gaiter.
Do not exceed specified voltage.

ORIENTATION

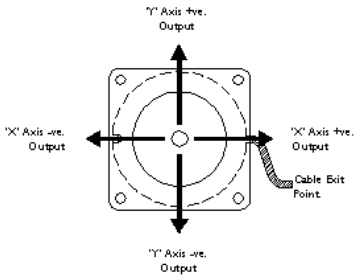

ELECTRONIC SPECIFICATION

Supply voltage (Vs)	4.75V min - 15V max
Signal swing (from centre)	+/- 10% Vs
Output signal tolerance	+/- 10% of specified output
Output impedance	1.8k? +/- 1%
Signal ripple	<1% of output
Supply current	Typically 10 mA
Operating temperature	-20°C - +55°C
ESD Immunity	> 12kV - (correctly installed)
RFI rejection - (Base specification)	> 20V/m - (Bare joystick)
RFI rejection - (typical)	> 40V/m - (Installed)
Preferred load	>10K

EQUIVALENT CIRCUIT

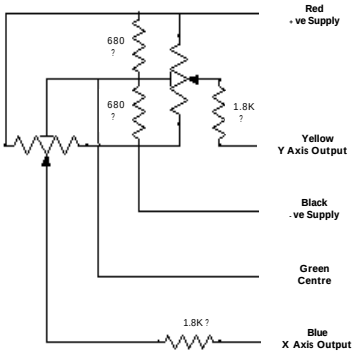

MECHANICAL SPECIFICATION

Body	Glass re-enforced ABS
Shaft - Material	A303 Stainless steel
Shaft diameter	5mm nominal
Washer plate	Brass
Gimbal pivot	Acetal
Centering cone	Acetal
Spring	Stainless steel
Pivot pins	Hardened steel
Limiter plate	Glass re-enforced Nylon
Bezels	Glass re-enforced Nylon
Gaiter (Boot)	Vinyl
Knob	Duraplast - Phenolic
Operating lever deflection	*/- 18° (@ N/E/S/W points)
Output leads insulation	Soft PVC
Output leads	14/0076 tinned copper
Max load to Shaft - Horizontal	30Kg typical
Max load to Shaft - Vertical	75Kg typical
Environmental	IP 65 above panel (installed)
Weight	70g typical
Service life.	10,000,000 cycles typical

DIMENSIONS

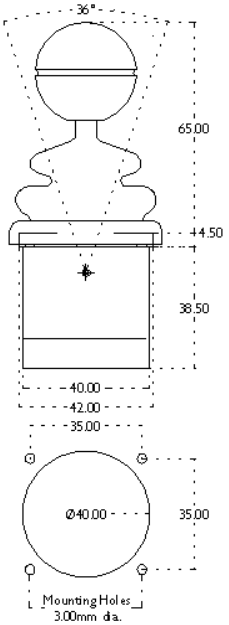

The Company reserves the right to change specification without notice. ADB0203