Precision pressure regulator, Series AS2-RGP

2024-03-19

R412006140

Series AS2

The AVENTICS Series AS2 is a modular, versatile maintenance unit for universal application. This Series offers compact dimensions, is highly efficient, lightweight and easy-to-use. The AVENTICS Series AS guarantees reliability, safety, and efficiency with a simplified assembly and maintenance efforts.



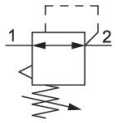

Technical data

Industry	Industrial
Function	Precision pressure regulator
Parts	Precision pressure regulator
Mounting orientation	Any
Regulator type	Diaphragm-type pressure regulator
Port	G 1/4
Nominal flow Qn	2200 l/min
Min. regulation range	0.2 bar
Max. regulation range	4 bar
Min. working pressure	0.2 bar
Max. working pressure	16 bar
Min. ambient temperature	-10 °C
Max. ambient temperature	50 °C
Activation	Mechanical
Regulator function	with relieving air exhaust
Regulator type	Can be assembled into blocks
Pressure supply	single
Lock type	for padlocks
Max. internal air consumption q_v	2.6 l/min

Precision pressure regulator, Series AS2-RGP

2024-03-19

R412006140

Medium	Compressed air Neutral gases
Weight	0.248 kg

Material

Housing material	Polyamide
Material front plate	Acrylonitrile butadiene styrene
Seal material	Acrylonitrile butadiene rubber
Material threaded bushing	Die cast zinc
Part No.	R412006140

Technical information

The pressure dew point must be at least 15 °C less than ambient and medium temperature and may not exceed 3 °C.

The rear pressure gauge connection on the pressure regulator is closed with a blanking plug, the front connection is open. Depending on the customer application, a second blanking plug may be necessary. Please order separately (see accessories).

Nominal flow Qn with secondary pressure p2 = 6 bar at Δp = 1 bar

A change in the flow direction (from air supply on the left to air supply on the right) occurs by rotating installation by 180° about the vertical axis. Please see the operating instructions for further details.

Recommended pre-filter: 5 µm

Order pressure gauge separately

Dimensions in mm

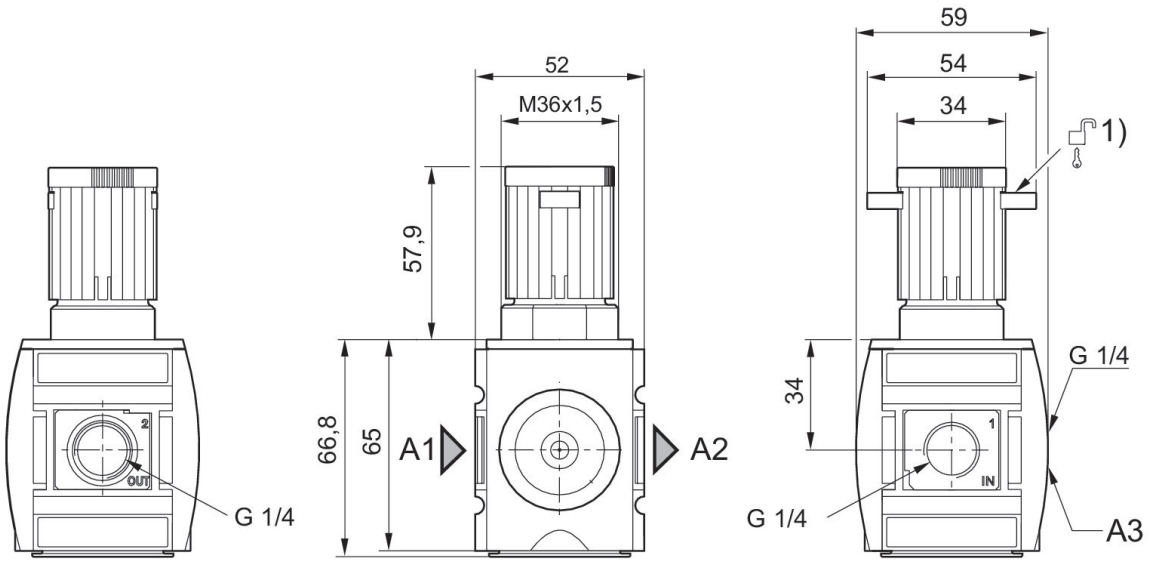

A1 = input

A2 = output
A3 = pressure gauge connection
1) Mounting option for padlocks, max. shackle Ø 8

Pressure characteristics curve

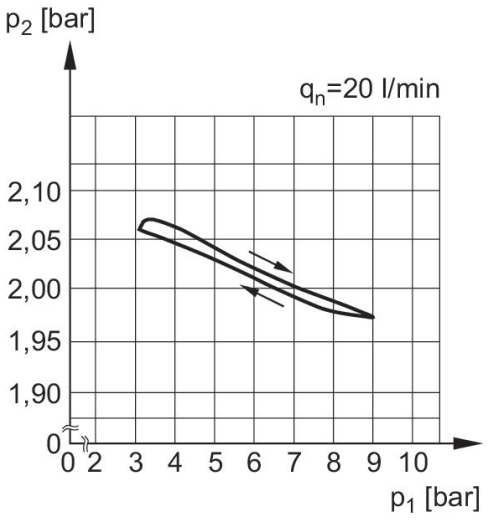

p1 = Working pressure
p2 = Secondary pressure
q = flow rate

Flow rate characteristic (p2: 0,5 - 8 bar)

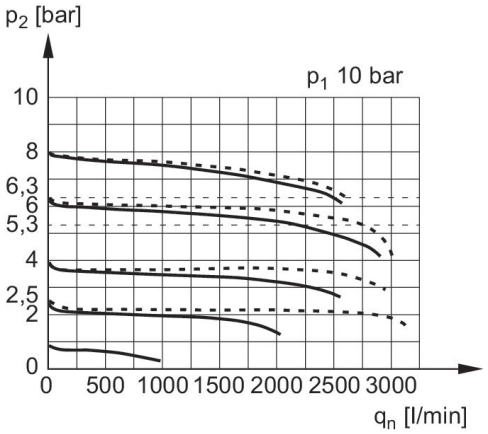

p1 = Working pressure
p2 = Secondary pressure
qn = Nominal flow

Precision pressure regulator, Series AS2-RGP

2024-03-19

R412006140

Accessories overview

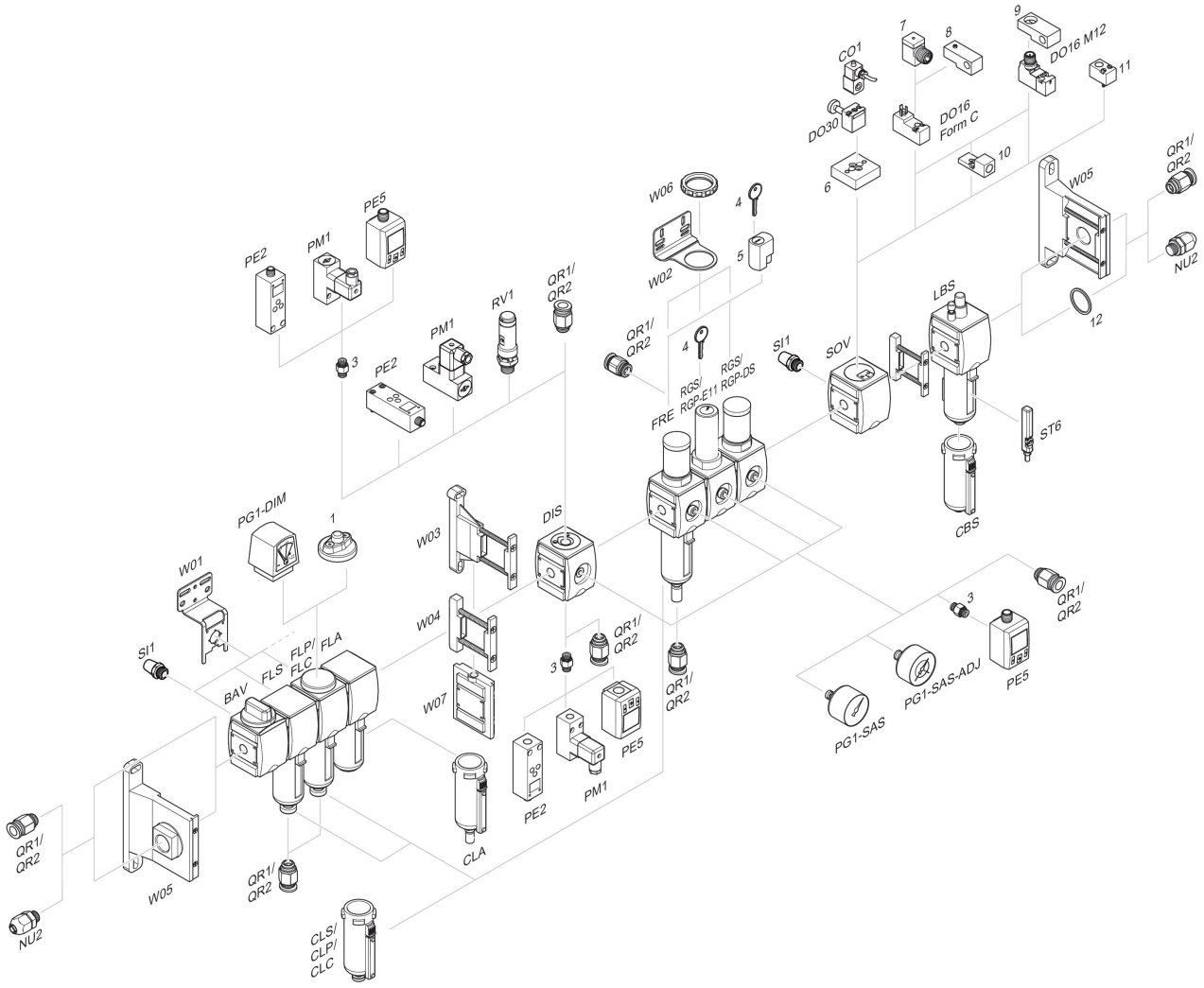

1 = contamination display 3 = Double nipple 4 = Key for E11 locking 5 = mortise lock 6 = Transition plate DO30 7 = Adapter, Series CON-VP 8 = Mounting aid DO16, form C 9 = Mounting aid DO16, M12 10 = Adapter for external pilot air 11 = Adapter pneumatic operation 12 = Sealing ring