efector150

KI503A

KIE4150NCPKG/3D

Capacitive sensors

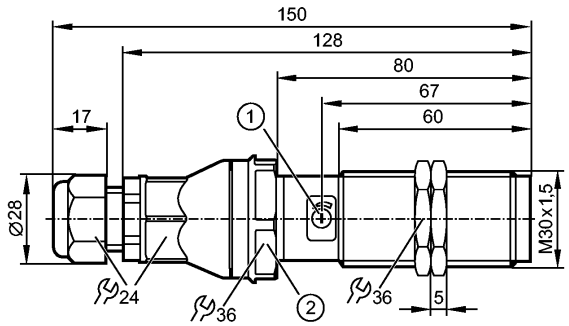

1: potentiometer
2: tightening torque 10 Nm

Made in Germany

CE

Product characteristics		
Capacitive sensor		
Plastic thread M30 x 1.5		
Terminals		
ATEX approval		
Group II, category 3D		
Sensing range 15 mm; adjustable; [nf] non-flush mountable		
Electrical data		
Electrical design		DC PNP
Operating voltage	[V]	10...30 DC
Current consumption	[mA]	< 20
Protection class		III
Reverse polarity protection		yes
Outputs		
Output function		normally open / closed complementary
Voltage drop	[V]	< 2.5
Leakage current	[mA]	0.1
Current rating	[mA]	200
Short-circuit protection		Yes (non-latching)
Overload protection		yes
Switching frequency	[Hz]	10
Monitoring range		
Sensing range	[mm]	15, adjustable
Real sensing range (Sr)	[mm]	15 ± 10 %
Accuracy / deviations		
Hysteresis	[% of Sr]	1...15
Switch-point drift	[% of Sr]	-20...20
Environment		
Ambient temperature	[°C]	-20...60
Protection		IP 65 / IP 67
Tests / approvals		
Marking of the unit		Ex II 3D Ex tc IIIC T90°C Dc X
EMC		EN 61000-4-2 ESD: kV / 8 kV AD EN 61000-4-3 HF radiated: 3 V/m (80...2000 MHz)

	EN 61000-4-4 Burst: EN 61000-4-6 HF conducted: EN 55011: IEC 60255-5	2 kV 3 V (0.15...80 MHz) class B 1 kV (line to line, Ri: 500 Ohm)
MTTF [Years]	463	

Mechanical data

Mounting	non-flush mountable
Housing materials	PBT; PA
Weight [kg]	0.147

Displays / operating elements

Output status indication LED	yellow

Electrical connection

Connection	Terminals 0.34 to 1.5 mm²; cable diameter 5...9 mm, cable gland M20 x 1.5

Wiring

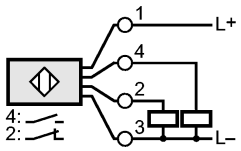

Accessories

Accessories (included)	2 lock nuts

Remarks

Pack quantity [piece]	1