8BCM0020.3111A-0

1 General information

- Extremely flexible
- Assembled specifically for use with ACOPOSmulti drive systems and B&R servo motors with motor connector size 1
- speedtec - Innovative connector system for secure connections
- Integrated shield plate

Information:

A shield plate is attached to ACOPOSmulti motor cables. If this shield plate is correctly installed on the respective ACOPOSmulti 8BVI inverter module, no additional shielding measures are necessary.

2 Order data

Order number	Short description	Figure
	Motor cables 1,5 mm²	
8BCM0020.3111A-0	ACOPOSmulti motor cable, length 20 m, 4x 1.5 mm² + 2x 2x 0.75 mm², 8-pin female speedtec motor connector size 1, integrated shield plate	

Table 1: 8BCM0020.3111A-0 - Order data

3 Technical data

Order number	8BCM0020.3111A-0
General information	
Cable cross section	4x 1.5 mm² + 2x 2x 0.75 mm²
Durability	Oil resistance TM5 per VDE 0281 Part 1 / HD21.1 Flame resistance per IEC 60332-1-2 / UL 2556 (VW-1) / CSA C22.2 No. 2556 (FT-1) [1)]
Certifications	
CE	Yes
UKCA	Yes
UL	cULus E225616 Power conversion equipment
EAC	Yes
Cable construction	
Power lines	
Quantity	4
Wire insulation	PP
Wire colors	Black, brown, blue, yellow/green
Variant	Tinned copper stranded wire
Cross section	1.5 mm²
Shield	No
Stranding	No
Signal line	
Quantity	4
Wire insulation	PP
Wire colors	White, white/red, white/blue, white/green
Variant	Tinned copper stranded wire
Cross section	0.75 mm²
Shield	Individually shielded in pairs, tinned copper braiding, optical coverage >85% and foil shield
Stranding	White with white/red and white/blue with white/green
Cable stranding	With filler elements and foil shield
Cable shield	Tinned copper braiding, optical coverage >85% and foil shield
Outer jacket	
Material	PVC
Color	Orange, similar to RAL 2003 flat
Connector	
Type	8-pin female speedtec motor connector, size 1
Mating cycles	<500

Table 2: 8BCM0020.3111A-0 - Technical data

Order number	8BCM0020.3111A-0
Contacts	8 (4 power and 4 signal contacts)
Degree of protection per EN 60529	IP66/67 when connected
Electrical properties [1]	
Test voltage	
Wire - Wire	4 kV
Wire - Shield	3 kV
Conductor resistance	
Power lines	≤13.7 Ω/km
Signal line	≤26.7 Ω/km
Insulation resistance	≥100 MΩ*km
Current-carrying capacity per DIN VDE 0298 part 4, table 11	
Wall mounting	15.2 A
Installed in conduit or cable duct	13.1 A
Installed in cable tray	16.1 A
Ambient conditions [1]	
Temperature	
Moving	-20°C to +80°C
Static	-20°C to +90°C
Mechanical properties [1]	
Dimensions	
Length	20 m
Diameter	12.3 mm ±0.4 mm
Bend radius	
Single bend	>64 mm
Moving	≥190 mm
Weight	4.6 kg

Table 2: 8BCM0020.3111A-0 - Technical data

1) Values refer to the raw cable being used.

4 Wiring

Construction

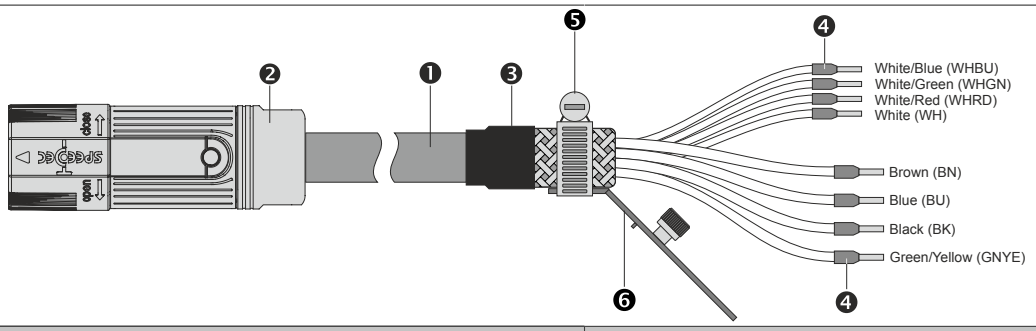

Pos.	Description	Note
1	Motor line	4x 0.75 mm² + 2x 2x 0.34 mm² 4x 1.5 mm² + 2x 2x 0.75 mm² 4x 4 mm² + 2x 2x 1 mm²
2	8-pin female speedtec motor connector	Dimensions: ø 28 x 78 mm
3	Heat shrink tubing	
4	Wire end sleeves	
5	Cable clamp	
6	Shield plate	

Table 3: ACOPOSmulti motor cables with speedtec connector size 1 - Construction

Pinout

Circular connector	Pin	Description	Function
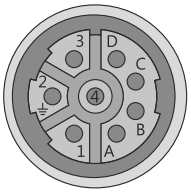	1	U	Motor connection U
	2	PE	Protective ground conductor
	3	W	Motor connection W
	4	V	Motor connection V
	A	T+	Temperature +
	B	T-	Temperature -
	C	B+	Brake +
	D	B-	Brake -

Table 4: ACOPOSmulti motor cables with speedtec connector size 1 - Pinout

Cable diagram

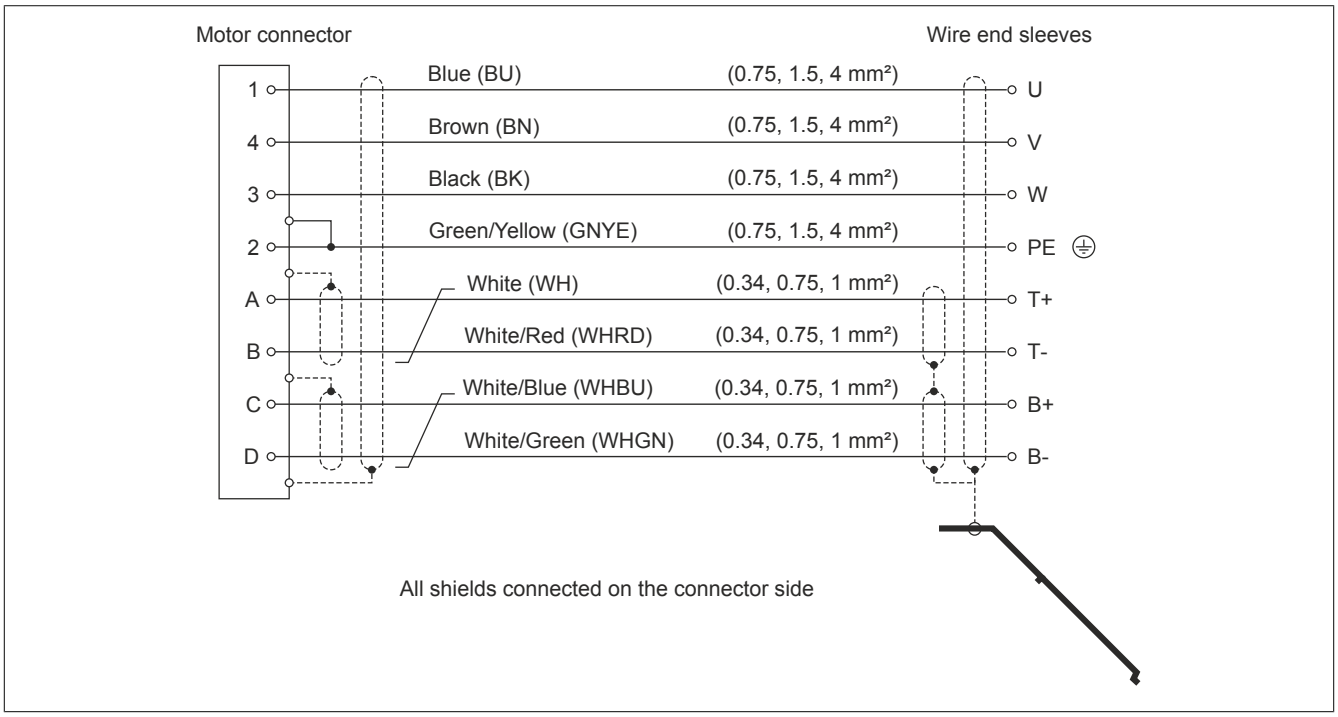

Figure 1: ACOPOSmulti motor cables with speedtec connector size 1 - Cable diagram