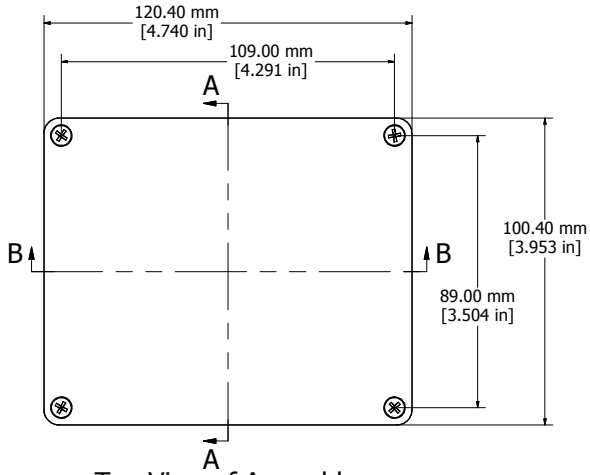

Top View of Assembly

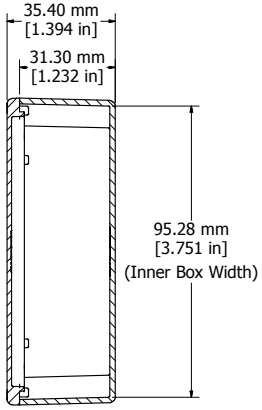

SECTION A-A
End View of Assembly

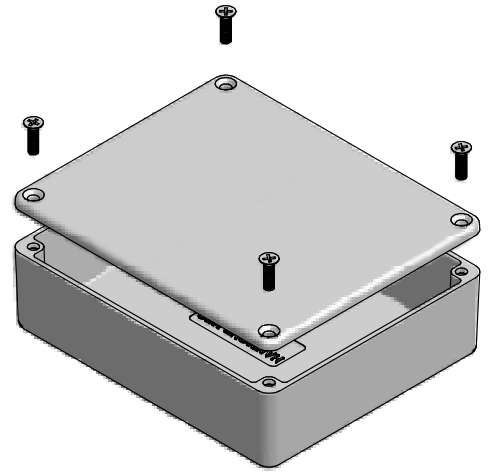

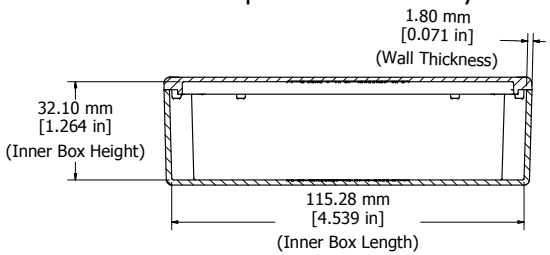

SECTION B-B
Side View of Assembly

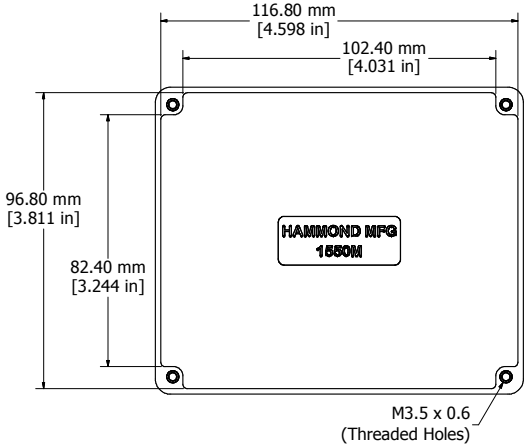

Top View Looking Inside Box

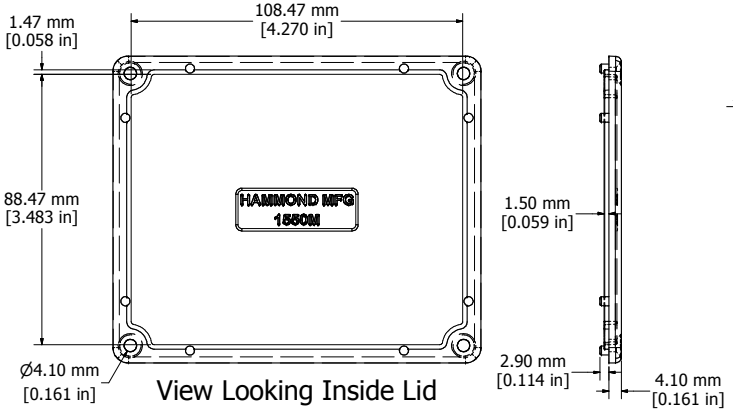

View Looking Inside Lid

Enclosures can be Factory Modified (Milling, Drilling, Printing etc.)
Contact Factory mjm@hammondmfg.com for quotes
Solid models of this enclosure available in STEP or IGES.

NOTE
Purchased assembly includes box, lid, and 4 cover screws. Box and lid are made from Diecast Aluminum Alloy. EVA Foam Gasket supplied with Liquid Resistant Enclosures

PART NUMBERS	
1550M Enclosure	
Unfinished	1550M
Black Textured Polyester Powder Paint	1550MBK
1550WM Liquid Resistant Enclosure (Silicon Factory Installed Gasket)	
Unfinished	1550WM
Black Textured Polyester Powder Paint	1550WMBK
Accessories	
Recommended Torque: 75 ozf.in / 55 cN.m	
Unfinished Cover Screws (Pkg 100) [M3.5 x 0.6 18-8 SS]	1550MS100
Black Cover Screws (Pkg 100) [M3.5 x 0.6 18-8 SS]	1550MS100BK

HAMMOND MANUFACTURING™

1550M

www.hammondmfg.com