DC Current Transducer DK-B420

I_{PN} = 150 .. 400 A

Split core transducer for the electronic measurement of DC current, with galvanic separation between the primary circuit and the secondary circuit. 4-20 mA DC output current proportional to measured current.



Electrical data

Primary nominal current I_{PN} (At)	Output current I_{OUT} (mA DC)	Types	RoHS since date code
150, 225, 300	4-20	**DK 300 B420**	August 2009
200, 300, 400	4-20	**DK 400 B420**	August 2009

U_C	Supply voltage	20-45	V DC
R_L	Maximum load resistance	500	Ω
I_{SL}	Output current limitation	23	mA
I_C	Maximum current consumption	100	mA

Accuracy - Dynamic performance data

X	Accuracy @ I_{PN}, T_A = 25 °C	± 2	% of FS
ε_L	Linearity error	± 0.75	% of I_{PN}
t_r	Step response time to 90 % of I_{PN}	< 100	ms
BW	Frequency bandwidth	DC	Hz

General data

T_A	Ambient operating temperature (0-95% *RH*)	- 20 .. + 50	°C
T_S	Ambient storage temperature	- 20 .. + 85	°C
m	Mass	120	g
IPxx	Protection degree	IP 20	
	Sandards	Safety IEC 61010-1: 2001	
		EMC [1] IEC 61326-1: 2005	

Note: [1] For IEC 61000-4-3, IEC 61000-4-6 and IEC 61000-4-4 Criterion B: temporary impairment to operational behavior.

Features

- DC measurement (magnitude only)
- Split core case
- Three jumper selectable ranges
- Industry standard 4-20 mA unipolar current output
- Panel mounting
- Insulating plastic case recognized according to UL 94-V0.

Advantages

- Large aperture
- Extended measuring range
- High insulation between primary and secondary circuits
- Easy to mount, cut installation costs
- No insertion loss (voltage drop).

Applications

- ***Battery banks***
  Load current monitoring
  Charging current monitoring
  Operation supervision
- ***Power supplies***
  DC power or auxiliary loads measurement
- ***Electric heating elements***
  Faster response than temperature transducers.

Application domain

- Renewable Energies and Power Supplies.

LEM reserves the right to carry out modifications on its transducers, in order to improve them, without prior notice

DC current Transducer DK-B420

Insulation coordination

U_d	Rms voltage for AC insulation test [1], 50 Hz, 1 min	3	kV
U_B	Rated insulation rms voltage [2], reinforced or basic insulation, CAT III, PD2	150	V

Notes: [1] Between primary (completely filling the primary aperture) and secondary
[2] If insulated cable is used for the primary circuit, the voltage category could be improved according to the insulation coordination given by the cable manufacturer. For example:

Cable insulation (primary):	Category:
HAR 05	600 V CAT III
HAR 07	1000 V CAT III

Safety and warning notes

In order to guarantee safe operation of the transducer and to be able to make proper use of all features and functions, please read these instructions thoroughly! Safe operation can only be guaranteed if the transducer is used for the purpose it has been designed for and within the limits of the technical specifications. Ensure you get up-to-date technical information that can be found in the latest associated datasheet under www.lem.com.



Caution! Risk of danger

Ignoring the warnings can lead to serious injury and/or cause damage! The electric measuring transducer may only be installed and put into operation by qualified personnel that have received an appropriate training. The corresponding national regulations shall be observed during installation and operation of the transducer and any electrical conductor. The transducer shall be used in electric/electronic equipment with respect to applicable standards and safety requirements and in accordance with all the related systems and components manufacturer' operating instructions.



Caution, Risk of electrical shock

When operating the transducer, certain parts of the module may carry hazardous live voltage (eg. primary conductor, power supply). The user shall ensure to take all measures necessary to protect against electical shock. The transducer is a build-in device containing conducting parts that shall not be accessible after installation. A protective enclosure or additional insulation barrier may be necessary. The transducer shall not be put into operation if the jaw opening is open (split core version) or the installation is not completed. Installation and maintenance shall be done with the main power supply disconnected except if there are no hazardous live parts in or in close proximity to the system and if the applicable national regulations are fully observed.

Safe and trouble-free operation of this transducer can only be guaranteed if transport, storage and installation are carried out correctly and operation and maintenance are carried out with care.

Dimensions DK-B420 (in mm)

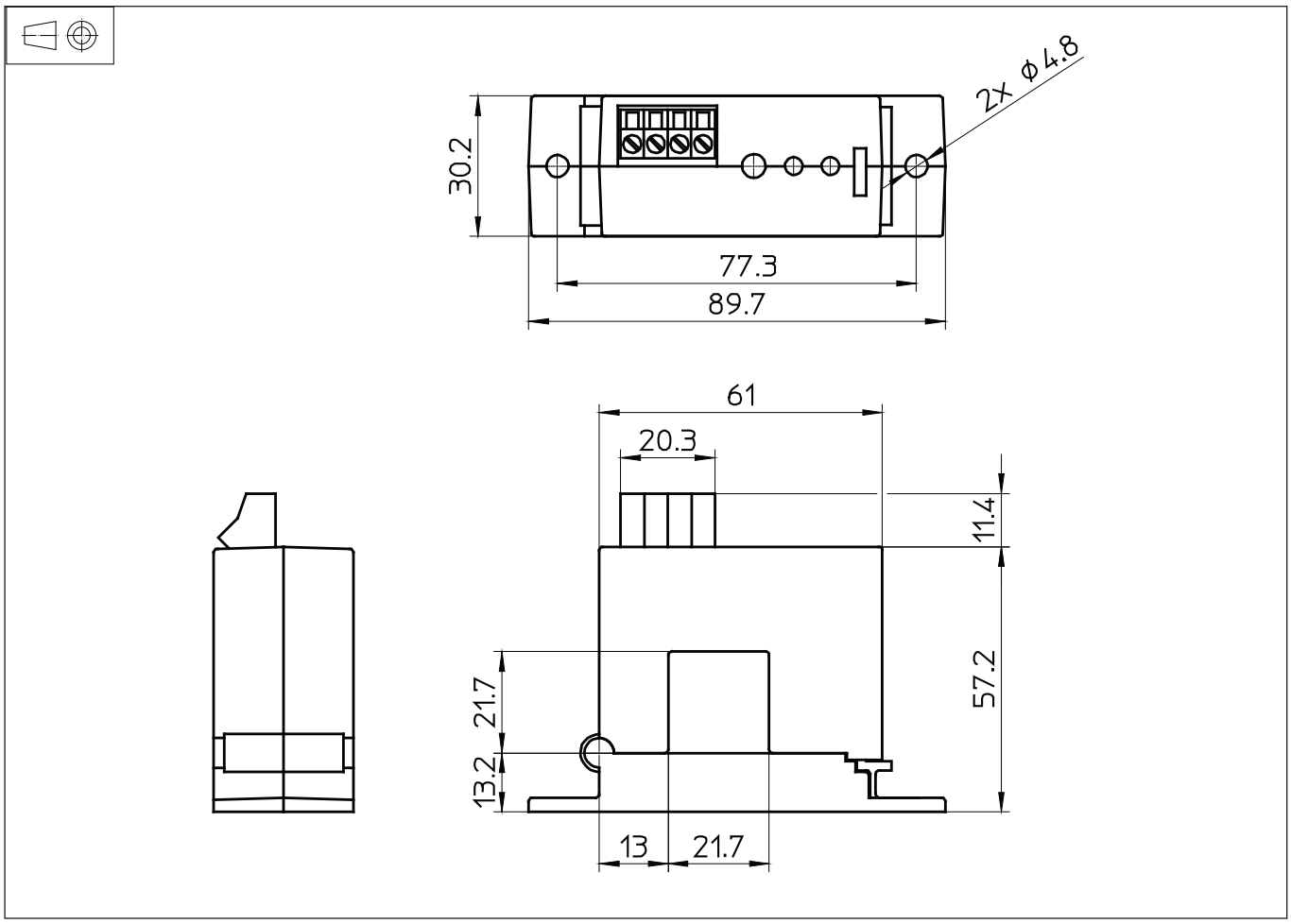

Mechanical characteristics

- General tolerance ± 1 mm
- Primary aperture 21.7 mm square
- Panel mounting 2 holes Ø 4.8 mm
  Distance between holes 77.3 mm

Transfer characteristics

- DC measurement [1] (magnitude only)

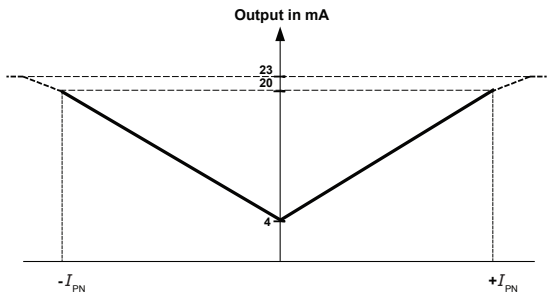

Note: [1] The performance specified in the datasheet is valid within the 4-20 mA output range only.

Connections

- Dead front captive screw terminals
- 12-22AWG solid or stranded
- Observe polarity
- Output loop is powered by DK transducer.
  No loop power supply required

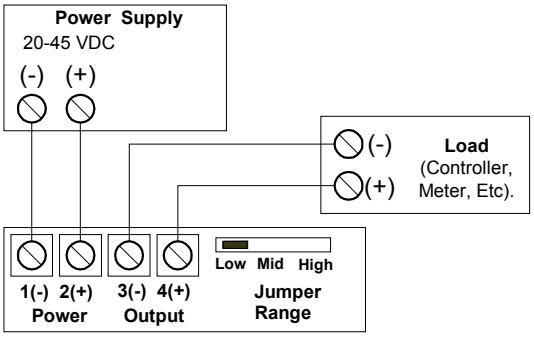

Option on request

- DIN rail adaptor (ref.: F2.90.98.000.1)

Remark

- Temperature of the primary conductor should not exceed 60° C.

LEM reserves the right to carry out modifications on its transducers, in order to improve them, without prior notice