1597DINCOV11

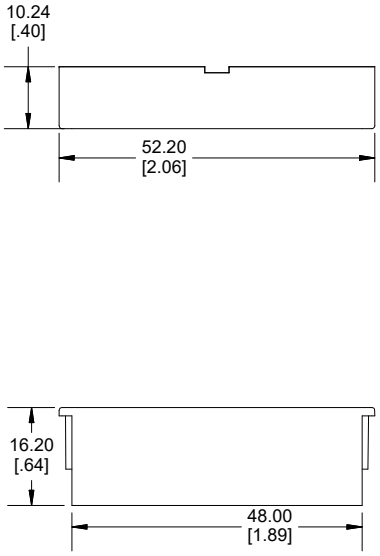

1597DINCOV12

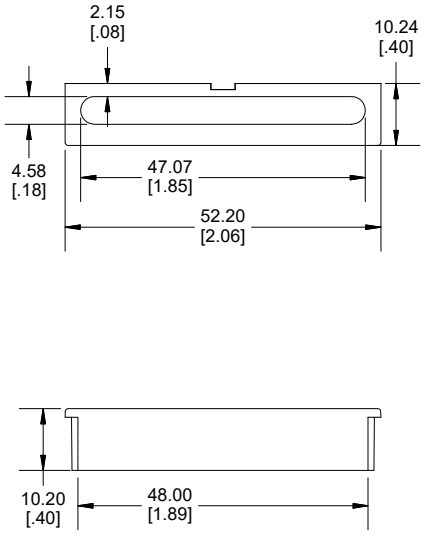

1597DINCOV13

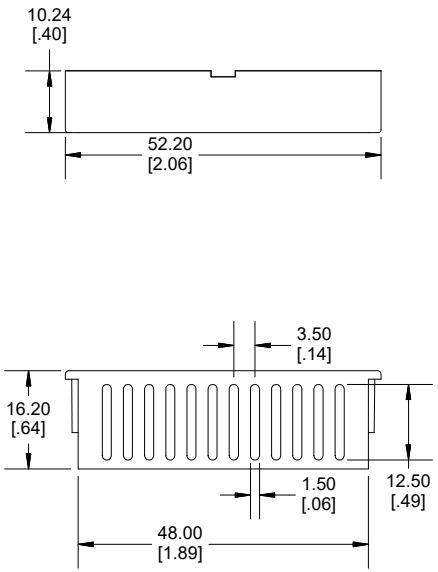

1597DINCOV14

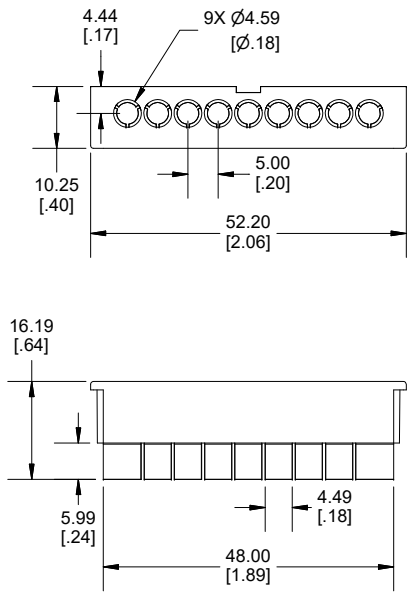

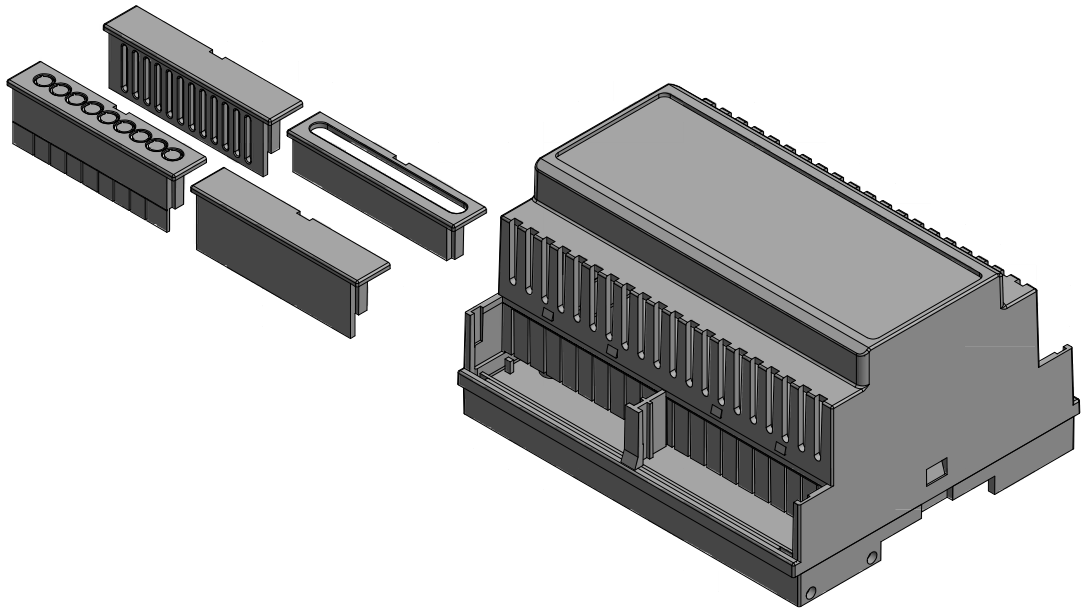

Dimensions:
mm
[inches]

HAMMOND MANUFACTURING®

1597DIN ACCS

www.hammondmfg.com

REV:28.04.2020