Connector/cable

BCC S425-0000-1A-008-VX44T2-050
Order code: BCC0APK

BALLUFF
sensors worldwide

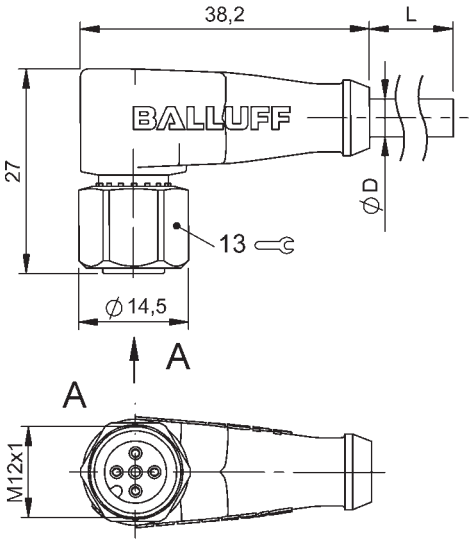

- **Female M12**
- **90°angle**

LISTED 4MT5
(CYJV CABLE ASSEMBLY)

General attributes

Additional features	Drag chain compatible
Approvals / Conformity	cULus LISTED
Cable jacket color	yellow
Enclosure Type per IEC 60529	IP69K
Function indicator	Yes
Function indicator (PIN 2)	No
Function indicator (PIN 4)	LED yellow
Power indicator	LED green

Electrical attributes

Operating voltage UB max. DC [V]	36.0 V
Rated current (40°C)	4.0 A
Switching function	Complementary (NO/NC)
Switching output	PNP

Mechanical attributes

Acceleration max. (drag chain)	5 m/s²
Ambient temp. max. (fixed)	105 °C
Ambient temp. max. (moving)	105 °C
Ambient temp. max.(drag chain)	60 °C
Ambient temp. min. (fixed)	-40 °C
Ambient temp. min. (moving)	-5 °C
Ambient temp. min.(drag chain)	-5 °C
Bending cycles	> 2 Mio.
Bending radius fixed cable	min. 5 x D
Bending radius tensioned cable	min. 10 x D
Cable diameter D	5.0 +/- 0.15 mm
Cable jacket material	PVC
Cable length L [m]	5.00 m
Conductor cross-section	22 AWG
Connector configuration	90°angle
Connector type	M12, A-coded
Connector type (Header I)	Female M12
Contact material	CuZn
Cover nut material	Stainless steel
Drag chain compatible	Yes
Grip material	polyether TPU
Number of conductors	4
Number of female/male pins	5
Permiss.horizon. traverse dist	at 5 m/sec² 5 m
Permiss.vert. traverse dist	at 5 m/sec² 2 m
System	molded
Tightening torque pigtail	0.6 Nm
Traverse speed max(drag chain)	at 5 m horiz. travel 200 m/min

Additional text
Cable Conductors according to UL-Style 10493
Raw Cable Approval UL-AWM Style 2661 & CSA AWM I/II A/B
Flame-Retardant per IEC 60332-2

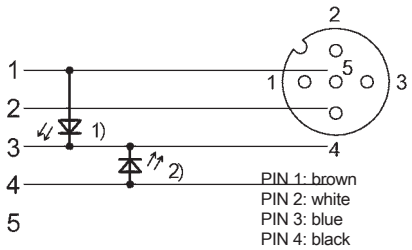

PIN 1: brown
PIN 2: white
PIN 3: blue
PIN 4: black

1) LED gn = Power indicator
2) LED ye = Function indicator