BOS 12M-PS-PR10-02
Order code: BOS01WR

Photoelectric sensor
Series 12M GLOBAL
Retro-reflective sensor
Sn = 3 m, adjustable

DC, direct current
PNP (1x)
NO: dark-on
1,000 Hz
LED, red light

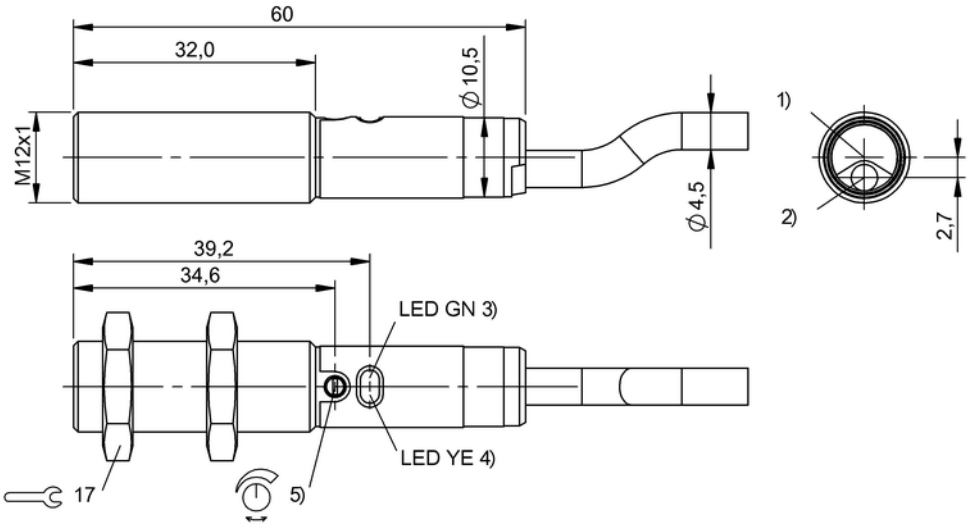

1) Optical axis receiver 2) Optical axis emitter 3) Power 4) Light reception/Limit range 5) Sn

Basic data

Operating voltage UB DC	10.0 V... 30.0 V
Eff. operating voltage Ue DC	24.0 V
Ripple max. (% of Ue)	15 %
No-load current max. Io at Ue	20 mA
Polarity reversal protected	yes
Rated insulation voltage Ui	75 V DC
Indicator	Power - LED GN Light receipt - LED YE Limit range - LED YE, flash.
Adjuster	Potentiometer 270° (1x)
Setting	Switching distance (Sn)
Ambient temperature Ta	-5 °C... 55 °C

Optical data

Principle of optical operation	Retro-reflective sensor
Operating range Ro	0...3 m
Reference reflector	BOS R-1
Light type	LED, red light
Wavelength	644 nm
LED group acc. IEC 62471	Exempt group
Polarizing filter	yes
Light spot size, typical	Ø 160 mm at 3 m
Beam characteristic	Divergent
Ambient light max.	10,000 Lux

Electrical data

Eff. operating distance Sr	3,000 mm
Switching output	PNP (1x)
Switching function	NO
Eff. operating current Ie	100 mA
Switching freq. f max. (at Ue)	1,000 Hz
Turn on time ton max.	0.50 ms
Turn off time toff max.	0.50 ms
Voltage drop Ud max. (at Ie)	1.5 V
Short circuit protected	yes
Load capacitance max. (at Ue)	0.20 µF

Mechanical data

Style	Cylinder, straight optics
Dimensions	Ø12.0 mm x 60.0 mm
Mounting type	Nut M12x1
Tightening torque max.	7/15 Nm
Housing material	Brass
Surface protection	Nickel-plated
Werkstoff aktive Fläche	PMMA
Degree of protec. per IEC60529	IP67
Connection type	Cable
Cable diameter D max.	4.6 mm
Cable length	2.00 m
Number of conductors	3
Conductor cross-section	0.34 mm²
Cable jacket material	PVC

Approval

Approvals / Conformity	CE

Remarks

Basic standard	IEC 60947-5-2

The sensor is functional again after the overload has been eliminated.
Polarizing filters prevent spurious switching due to reflecting and shiny parts.
For additional information, refer to user's guide.
Order accessories separately.

CE

0000000000000/240089/00000000

BOS 12M-PS-PR10-02
Order code: BOS01WR

BALLUFF
sensors worldwide

Photoelectric sensor
Series 12M GLOBAL
Retro-reflective sensor
Sn = 3 m, adjustable

DC, direct current
PNP (1x)
NO: dark-on
1,000 Hz
LED, red light

Definitions see general catalog

Subject to change without notice.

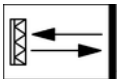



LED-Light - DO NOT STARE INTO BEAM! Exempt group per IEC 62471:2006-07

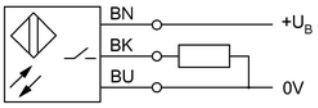

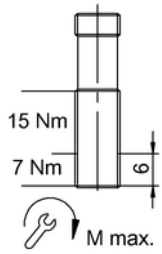

000000000000/240089/00000000