EVC394

Connection cable

VDOAH043MSS0010H04STGH040MSS

Please see the technical note under "Downloads"

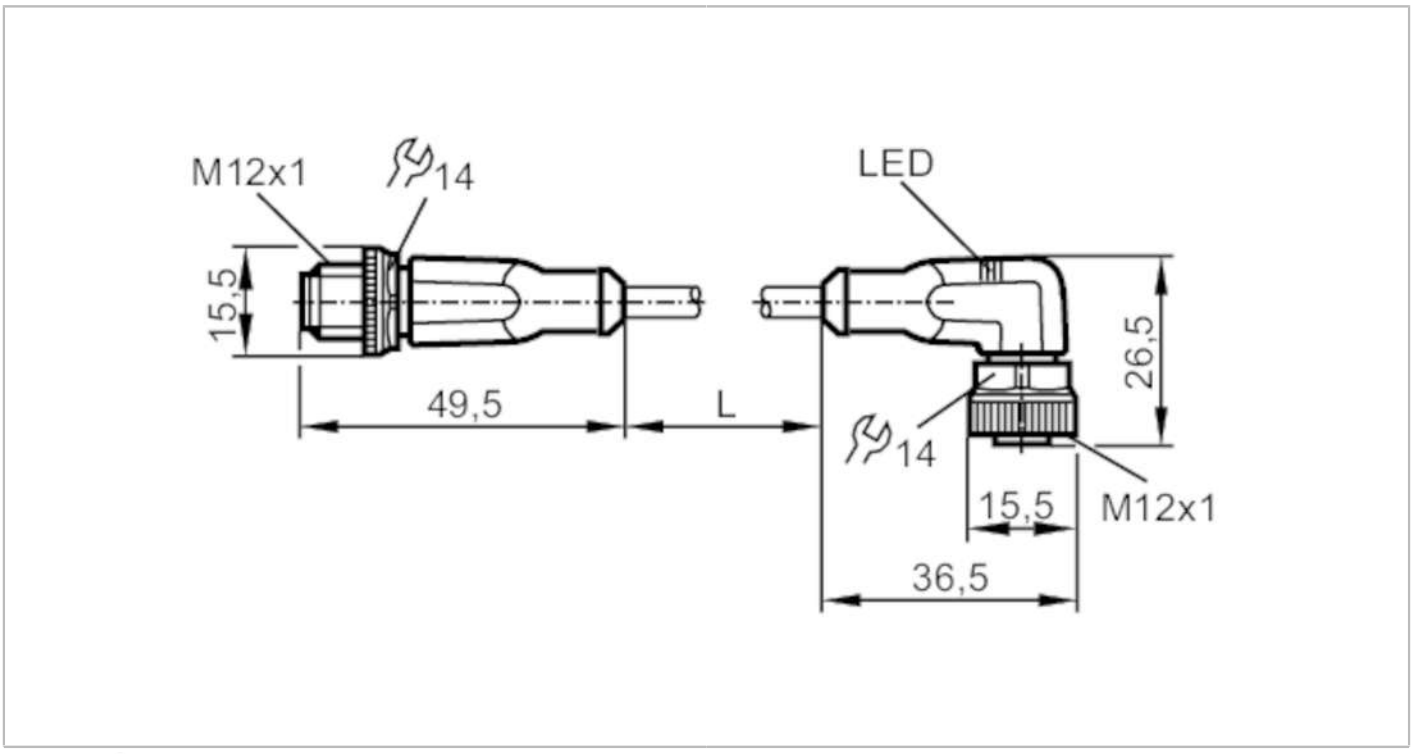

Application		
Special feature		Free from silicone; Halogen-free; Gold-plated contacts; Drag chain suitability
Free from silicone		yes
Electrical data		
Operating voltage	[V]	10...36 DC
Protection class		II
Max. current load total	[A]	4
Outputs		
Electrical design		PNP
Operating conditions		
Ambient temperature	[°C]	-25...90
Note on ambient temperature		cULus: ...75
Ambient temperature (moving)	[°C]	-25...90
Note on ambient temperature (moving)		cULus: ...75
Protection		IP 65; IP 67; IP 68; IP 69K
Tests / approvals		
MTTF	[years]	20027
Mechanical data		
Weight	[g]	339
Dimensions	[mm]	15.5 x 15.5 x 49.5

EVC394

Connection cable

VDOAH043MSS0010H04STGH040MSS

Moulded-body material	TPU	
Material nut	brass, nickel-plated	
Sealing material	FKM	
Drag chain suitability	yes	
Drag chain suitability	bending radius for flexible use	min. 10 x cable diameter
	travel speed	max. 3.3 m/s for a horizontal travel length of 5 m and max. acceleration of 5 m/s²
	bending cycles	> 5 Mio.
	torsional strain	± 180 °/m

Displays / operating elements

Display	switching status	1 x LED, yellow
	switching status	1 x LED, white
	operation	1 x LED, green

Remarks

Notes	Please see the technical note under "Downloads"
Pack quantity	1 pcs.

Electrical connection - plug

Connector: 1 x M12, straight; coding: A; Moulded body: TPU, orange; Locking: brass, nickel-plated; Contacts: gold-plated;
Tightening torque: 0.6...1.5 Nm



Electrical connection

Cable: 10 m, PUR, Halogen-free, black, Ø 4.3 mm; 4 x 0.34 mm² (42 x Ø 0.1 mm)

Connection

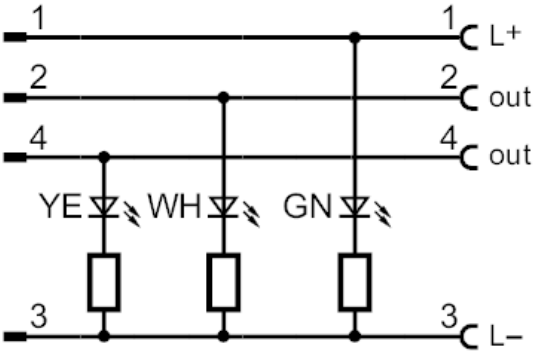

EVC394

Connection cable

VDOAH043MSS0010H04STGH040MSS

Electrical connection - socket

Connector: 1 x M12, angled; coding: A; Moulded body: TPU, black transparent; Locking: brass, nickel-plated; Sealing: FKM; Contacts: gold-plated; Tightening torque: 0.6...1.5 Nm

