THE INFORMATION CONTAINED IN THIS DRAWING IS THE SOLE PROPERTY OF L-COM, INC. ANY REPRODUCTION IN PART OR WHOLE WITHOUT THE WRITTEN PERMISSION OF L-COM, INC. IS PROHIBITED.

REVISIONS			
REV	DESCRIPTION	DATE	APPROVED
E	ECN 3781: CREATED TABULATED LENGTHS	1/6/09	D.FRISIELLO

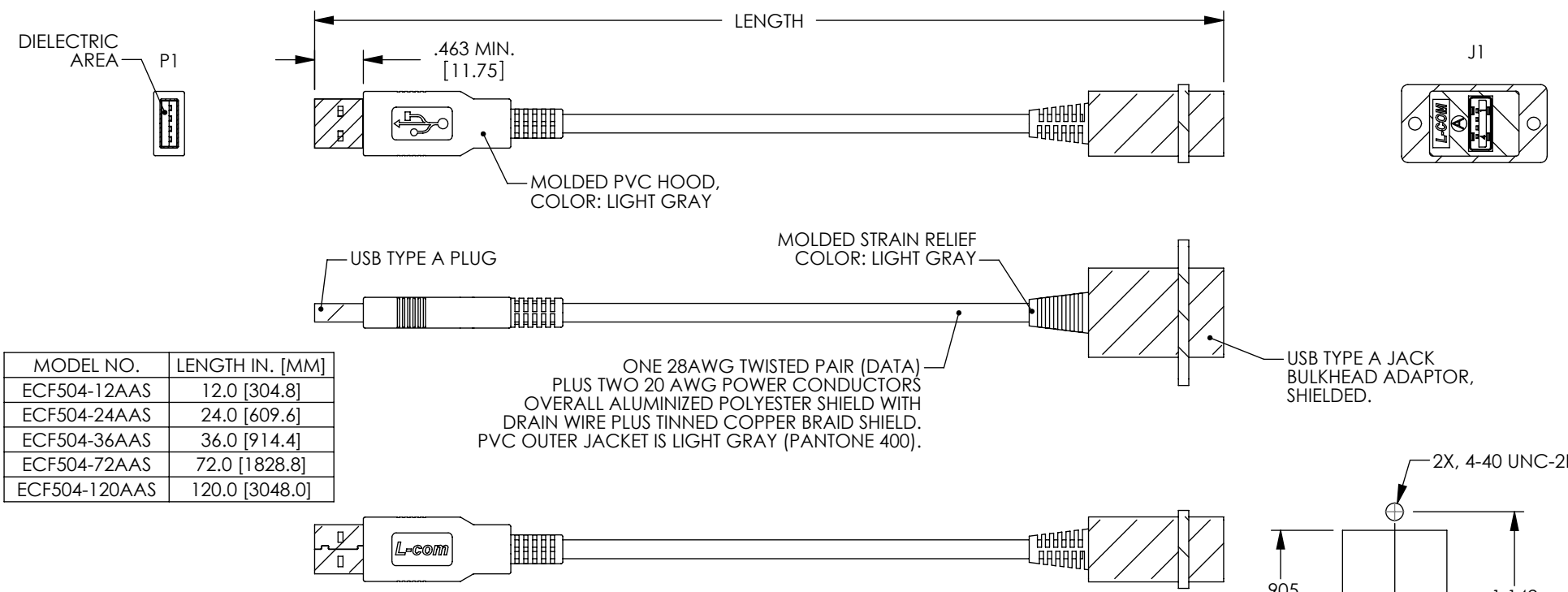

MODEL NO.	LENGTH IN. [MM]
ECF504-12AAS	12.0 [304.8]
ECF504-24AAS	24.0 [609.6]
ECF504-36AAS	36.0 [914.4]
ECF504-72AAS	72.0 [1828.8]
ECF504-120AAS	120.0 [3048.0]

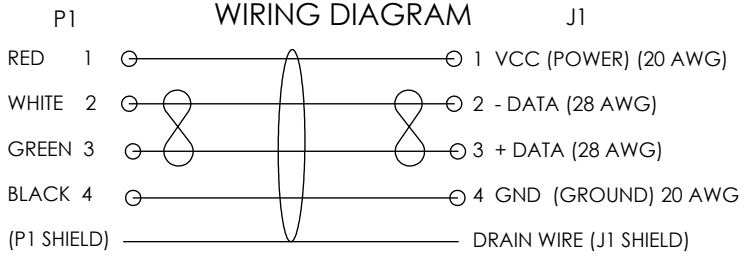

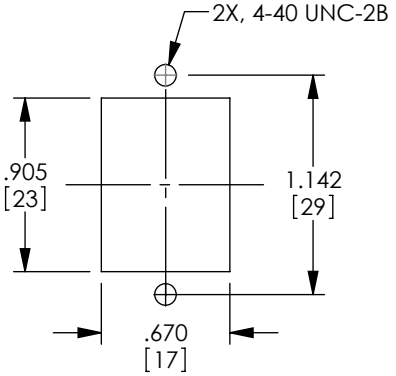

SPECIFICATIONS;
MEETS REQUIREMENTS OF USB 2.0
UL94V-0 COMPLIANT

MATERIALS;
BULKHEAD HOUSING: ABS WITH CHROME CONDUCTIVE LIQUID APPLIED PLATING
CONTACTS: PHOSPHOR BRONZE
CONTACT PLATING: 30 µINCHES GOLD OVER NICKEL

ELECTRICAL;
CURRENT RATING: 2 AMP MAX
VOLTAGE RATING: 125 VDC
USB JACK IS MOUNTED ON A PRINTED CIRCUIT BOARD

ENVIRONMENTAL;
OPERATING TEMPERATURE RANGE: -20°C TO +80°C

UNLESS OTHERWISE SPECIFIED,
DIMENSIONS ARE IN INCHES [mm]

OVERALL CABLE LENGTH TOLERANCE:
≤12 [305] = +1 [25] / -0
>12 [305] ≤60 [1524] = +2 [51] / -0
>60 [1524] ≤120 [3048] = +4 [102] / -0
>120 [3048] ≤300 [7620] = +6 [152] / -0
>300 [7620] = +5% / -0%

ALL OTHER DIMENSIONAL TOLERANCES:
.X = .3
.XX = .15

PROJECTION

APPROVALS		DATE
DRAWN BY	C.MCCORMICK	04/02/2003
CHECKED BY	D.PARHAM	04/02/2003
APPROVED BY	R.CARRICK	04/02/2003

CONFIGURATION DETAILS OF UNDIMENSIONED FEATURES MAY VARY

COLOR VARIATIONS MAY OCCUR

L-COM Global Connectivity
45 BEECHWOOD DRIVE
NORTH ANDOVER, MA
01845

CATEGORY
USB

PRODUCT DESCRIPTION
USB TYPE A JACK TO USB TYPE A PLUG

SIZE	FSCM NO.	DWG. NO.	REV.
A	43321	ECF504-12AAS	E

SCALE: NONE | CAD FILE: ECF504-12AAS.SLDDRW | SHEET 1 OF 1